User's Manual

Model 370

AC Resistance Bridge

Includes Coverage For:

Model 370S/L/U – AC Resistance Bridge with Model 3716/L 16-Channel Scanners and 3708 8-Channel Preamp

Model 370N – AC Resistance Bridge Only

Lake Shore Cryotronics, Inc.
575 McCorkle Blvd.
Westerville, Ohio 43082-8888 USA

E-mail Addresses:
sales@lakeshore.com
service@lakeshore.com

Visit Our Website At:
www.lakeshore.com

Fax: (614) 891-1392
Telephone: (614) 891-2243

Methods and apparatus disclosed and described herein have been developed solely on company funds of Lake Shore Cryotronics, Inc. No government or other contractual support or relationship whatsoever has existed which in any way affects or mitigates proprietary rights of Lake Shore Cryotronics, Inc. in these developments. Methods and apparatus disclosed herein may be subject to U.S. Patents existing or applied for. Lake Shore Cryotronics, Inc. reserves the right to add, improve, modify, or withdraw functions, design modifications, or products at any time without notice. Lake Shore shall not be liable for errors contained herein or for incidental or consequential damages in connection with furnishing, performance, or use of this material.

Revision: 1.14 P/N 119-033 **14 May 2009**

LIMITED WARRANTY STATEMENT

WARRANTY PERIOD: ONE (1) YEAR

1. Lake Shore warrants that this Lake Shore product (the "Product") will be free from defects in materials and workmanship for the Warranty Period specified above (the "Warranty Period"). If Lake Shore receives notice of any such defects during the Warranty Period and the Product is shipped freight prepaid, Lake Shore will, at its option, either repair or replace the Product if it is so defective without charge to the owner for parts, service labor or associated customary return shipping cost. Any such replacement for the Product may be either new or equivalent in performance to new. Replacement or repaired parts will be warranted for only the unexpired portion of the original warranty or 90 days (whichever is greater).
2. Lake Shore warrants the Product only if it has been sold by an authorized Lake Shore employee, sales representative, dealer or original equipment manufacturer (OEM).
3. The Product may contain remanufactured parts equivalent to new in performance or may have been subject to incidental use.
4. The Warranty Period begins on the date of delivery of the Product or later on the date of installation of the Product if the Product is installed by Lake Shore, provided that if you schedule or delay the Lake Shore installation for more than 30 days after delivery the Warranty Period begins on the 31st day after delivery.
5. This limited warranty does not apply to defects in the Product resulting from (a) improper or inadequate maintenance, repair or calibration, (b) fuses, software and non-rechargeable batteries, (c) software, interfacing, parts or other supplies not furnished by Lake Shore, (d) unauthorized modification or misuse, (e) operation outside of the published specifications or (f) improper site preparation or maintenance.
6. TO THE EXTENT ALLOWED BY APPLICABLE LAW, THE ABOVE WARRANTIES ARE EXCLUSIVE AND NO OTHER WARRANTY OR CONDITION, WHETHER WRITTEN OR ORAL, IS EXPRESSED OR IMPLIED. LAKE SHORE SPECIFICALLY DISCLAIMS ANY IMPLIED WARRANTIES OR CONDITIONS OF MERCHANTABILITY, SATISFACTORY QUALITY AND/OR FITNESS FOR A PARTICULAR PURPOSE WITH RESPECT TO THE PRODUCT. Some countries, states or provinces do not allow limitations on an implied warranty, so the above limitation or exclusion might not apply to you. This warranty gives you specific legal rights and you might also have other rights that vary from country to country, state to state or province to province.
7. TO THE EXTENT ALLOWED BY APPLICABLE LAW, THE REMEDIES IN THIS WARRANTY STATEMENT ARE YOUR SOLE AND EXCLUSIVE REMEDIES.
8. EXCEPT TO THE EXTENT PROHIBITED BY APPLICABLE LAW, IN NO EVENT WILL LAKE SHORE OR ANY OF ITS SUBSIDIARIES, AFFILIATES OR SUPPLIERS BE LIABLE FOR DIRECT, SPECIAL, INCIDENTAL, CONSEQUENTIAL OR OTHER DAMAGES (INCLUDING LOST PROFIT, LOST DATA OR DOWNTIME COSTS) ARISING OUT OF THE USE, INABILITY TO USE OR RESULT OF USE OF THE PRODUCT, WHETHER BASED IN WARRANTY, CONTRACT, TORT OR OTHER LEGAL THEORY, AND WHETHER OR NOT LAKE SHORE HAS BEEN ADVISED OF THE POSSIBILITY OF SUCH DAMAGES. Your use of the Product is entirely at your own risk. Some countries, states and provinces do not allow the exclusion of liability for incidental or consequential damages, so the above limitation may not apply to you.

LIMITED WARRANTY STATEMENT (Continued)

9. EXCEPT TO THE EXTENT ALLOWED BY APPLICABLE LAW, THE TERMS OF THIS LIMITED WARRANTY STATEMENT DO NOT EXCLUDE, RESTRICT OR MODIFY, AND ARE IN ADDITION TO, THE MANDATORY STATUTORY RIGHTS APPLICABLE TO THE SALE OF THE PRODUCT TO YOU.

CERTIFICATION

Lake Shore certifies that this product has been inspected and tested in accordance with its published specifications and that this product met its published specifications at the time of shipment. The accuracy and calibration of this product at the time of shipment are traceable to the United States National Institute of Standards and Technology (NIST); formerly known as the National Bureau of Standards (NBS).

FIRMWARE LIMITATIONS

Lake Shore has worked to ensure that the Model 370 firmware is as free of errors as possible, and that the results you obtain from the instrument are accurate and reliable. However, as with any computer-based software, the possibility of errors exists.

In any important research, as when using any laboratory equipment, results should be carefully examined and rechecked before final conclusions are drawn. Neither Lake Shore nor anyone else involved in the creation or production of this firmware can pay for loss of time, inconvenience, loss of use of the product, or property damage caused by this product or its failure to work, or any other incidental or consequential damages. Use of our product implies that you understand the Lake Shore license agreement and statement of limited warranty.

FIRMWARE LICENSE AGREEMENT

The firmware in this instrument is protected by United States copyright law and international treaty provisions. To maintain the warranty, the code contained in the firmware must not be modified. Any changes made to the code is at the user's risk. Lake Shore will assume no responsibility for damage or errors incurred as result of any changes made to the firmware.

Under the terms of this agreement you may only use the Model 370 firmware as physically installed in the instrument. Archival copies are strictly forbidden. You may not decompile, disassemble, or reverse engineer the firmware. If you suspect there are problems with the firmware, return the instrument to Lake Shore for repair under the terms of the Limited Warranty specified above. Any unauthorized duplication or use of the Model 370 firmware in whole or in part, in print, or in any other storage and retrieval system is forbidden.

TRADEMARK ACKNOWLEDGMENT

Many manufacturers and sellers claim designations used to distinguish their products as trademarks. Where those designations appear in this manual and Lake Shore was aware of a trademark claim, they appear with initial capital letters and the ™ or ® symbol.

CalCurve™, Cernox™, Duo-Twist™, Quad-Lead™, Quad-Twist™, Rox™, and SoftCal™ are trademarks of Lake Shore Cryotronics, Inc.

MS-DOS® and Windows® are trademarks of Microsoft Corp.

NI-488.2™ is a trademark of National Instruments.

PC, XT, AT, and PS-2 are trademarks of IBM.

Copyright © 2001 – 2009 by Lake Shore Cryotronics, Inc. All rights reserved. No portion of this manual may be reproduced, stored in a retrieval system, or transmitted, in any form or by any means, electronic, mechanical, photocopying, recording, or otherwise, without the express written permission of Lake Shore.

CE

DECLARATION OF CONFORMITY

We: **Lake Shore Cryotronics, Inc.**
575 McCorkle Blvd.
Westerville OH 43082-8888 USA

hereby declare that the equipment specified conforms to the following Directives and Standards:

Application of Council Directives: **73/23/EEC**
89/336/EEC

Standards to which Conformity is declared: **EN61010-1:2001**
Overvoltage II
Pollution Degree 2

EN61326 A2:2001
Class A
Annex B

Model Number: **370**

Ed Maloof 1-7-2004

Ed Maloof
Printed Name

Vice President of Engineering
Position

Electromagnetic Compatibility (EMC) for the Model 370 AC Resistance Bridge

Electromagnetic Compatibility (EMC) of electronic equipment is a growing concern worldwide. Emissions of and immunity to electromagnetic interference is now part of the design and manufacture of most electronics. To qualify for the CE Mark, the Model 370 meets or exceeds the requirements of the European EMC Directive 89/336/EEC as a **CLASS A** product. A Class A product is allowed to radiate more RF than a Class B product and must include the following warning:

WARNING: This is a Class A product. In a domestic environment, this product may cause radio interference in which case the user may be required to take adequate measures.

The instrument was tested under normal operating conditions with sensor and interface cables attached. If the installation and operating instructions in the User's Manual are followed, there should be no degradation in EMC performance.

This instrument is not intended for use in close proximity to RF Transmitters such as two-way radios and cell phones. Exposure to RF interference greater than that found in a typical laboratory environment may disturb the sensitive measurement circuitry of the instrument.

Pay special attention to instrument cabling. Improperly installed cabling may defeat even the best EMC protection. For the best performance from any precision instrument, follow the grounding and shielding instructions in the User's Manual. In addition, the installer of the Model 370 should consider the following:

- Shield measurement and computer interface cables.
- Leave no unused or unterminated cables attached to the instrument.
- Make cable runs as short and direct as possible. Higher radiated emissions is possible with long cables.
- Do not tightly bundle cables that carry different types of signals.

TABLE OF CONTENTS

Chapter/Paragraph	*Title*	*Page*
1	**INTRODUCTION**	**1-1**
1.0	GENERAL	1-1
1.1	DESCRIPTION	1-2
1.2	SENSOR PERFORMANCE	1-5
1.3	SPECIFICATIONS	1-9
1.4	SAFETY SUMMARY	1-11
1.5	SAFETY SYMBOLS	1-11
2	**BACKGROUND**	**2-1**
2.0	GENERAL	2-1
2.1	USEFUL TEMPERATURE RANGE	2-1
2.2	TEMPERATURE SCALES	2-1
2.3	CRYOGENIC COOLING SYSTEM TERMINOLOGY	2-1
2.3.1	Dilution Refrigerator Terminology	2-2
2.3.2	^{3}He Cryostat	2-3
2.3.3	Adiabatic Demagnetization Refrigerator (ADR)	2-4
2.4	MODEL 370 THEORY OF OPERATION	2-5
2.4.1	Why is the Model 370 called a Bridge?	2-5
2.4.2	Resistance Measurement	2-5
2.4.3	Excitation Modes	2-6
2.4.4	Resistance Ranges	2-6
2.4.5	Measurement Circuit	2-6
2.4.5.1	Shielding and Grounding Theory	2-7
2.4.5.2	Shields	2-7
2.4.5.3	Electrical Isolation	2-7
2.4.5.4	Driven Guards	2-7
2.4.5.5	Active Common Mode Reduction	2-8
2.4.5.6	Matched Impedance Current Source	2-8
2.4.6	Measurement Speed and Filtering	2-8
2.5	NOISE SOURCES	2-9
2.5.1	Induced Electrical Noise	2-9
2.5.2	Ground Loop Noise	2-9
2.5.3	Analog Circuit Noise	2-9
2.5.4	Digital Circuit Noise	2-9
2.5.5	Resistor Thermal Noise	2-10
2.5.6	Interference Between Two Model 370s	2-10
2.5.7	Vibration Noise	2-10
2.6	MEASUREMENT ERROR	2-10
2.6.1	Warm Up and Temperature Drift	2-10
2.6.2	Resistor Installation	2-10
2.6.3	Resistor Self-Heating and Thermal Resistance	2-11
2.6.4	Lead Resistance	2-11
2.6.5	Current Leakage	2-11
2.6.6	Cable Capacitance	2-11
2.6.7	Instrument Operation	2-12
2.7	OPERATING TRADEOFFS	2-12
2.7.1	Resistor Self-heating vs. Excitation	2-12
2.7.2	Excitation vs. Signal-to-Noise	2-13
2.7.3	Signal-to-Noise vs. Measurement Bandwidth	2-13
2.8	MODEL 3716/L and 3708 SCANNER	2-13
2.8.1	Scanner Performance	2-14
2.8.2	Controlling Temperature While Scanning	2-14
2.9	TEMPERATURE MEASUREMENT	2-14
2.9.1	Sensor Selection	2-14

TABLE OF CONTENTS (Continued)

Chapter/Paragraph	*Title*	*Page*
2.9.1.1	Sensitivity	2-14
2.9.1.2	Temperature Range	2-15
2.9.1.3	Temperature Resolution	2-15
2.9.1.4	Accuracy	2-15
2.9.1.5	Packaging	2-15
2.9.1.6	Environment	2-15
2.9.2	Sensor Calibration	2-16
2.9.3	Sensor Installation	2-16
2.9.3.1	Mounting Materials	2-16
2.9.3.2	Sensor Location	2-16
2.9.3.3	Thermal Conductivity	2-16
2.9.3.4	Contact Area	2-17
2.9.3.5	Contact Pressure	2-17
2.9.3.6	Lead Wire	2-17
2.9.3.7	Lead Soldering	2-17
2.9.3.8	Heat Sinking Leads	2-17
2.9.3.9	Thermal Radiation	2-17
2.10	TEMPERATURE CONTROL	2-17
2.10.1	Considerations For Good Control	2-18
2.10.1.1	Thermal Conductivity	2-18
2.10.1.2	Thermal Lag	2-18
2.10.1.3	Two-Sensor Approach	2-18
2.10.1.4	Thermal Mass	2-18
2.10.1.5	System Nonlinearity	2-18
2.10.2	Closed Loop PID Control	2-19
2.10.2.1	Proportional (P)	2-19
2.10.2.2	Integral (I)	2-19
2.10.2.3	Derivative (D)	2-19
2.10.2.4	Manual Output	2-19
2.10.3	Tuning a Closed Loop PID Controller	2-21
2.10.3.1	Setting Heater Range	2-21
2.10.3.2	Tuning Proportional	2-21
2.10.3.3	Tuning Integral	2-22
2.10.3.4	Tuning Derivative	2-22
3	**INSTALLATION**	**3-1**
3.0	GENERAL	3-1
3.1	INSPECTION AND UNPACKING	3-1
3.2	REAR PANEL DEFINITION	3-2
3.3	LINE INPUT ASSEMBLY	3-3
3.3.1	Line Voltage	3-3
3.3.2	Line Fuse and Fuse Holder	3-3
3.3.3	Power Cord	3-3
3.3.4	Power Switch	3-3
3.4	RESISTOR INPUT CONNECTION AND CABLING	3-4
3.4.1	Resistor Input Connector Definition	3-4
3.4.2	Shielding and Twisting	3-4
3.4.3	Driven Guards	3-5
3.4.4	Isolation and Grounding	3-5
3.4.5	Dressing Cables	3-6
3.4.6	Temperature Sensors	3-7
3.5	MODEL 3716 SCANNER INSTALLATION	3-7
3.5.1	Grounding the Scanner	3-7
3.5.2	Scanner Resistor Input Connector Definition	3-7
3.5.3	Scanner Resistor Input Cabling	3-7

TABLE OF CONTENTS (Continued)

Chapter/Paragraph	*Title*	*Page*
3.5.4	Scanner Output Connector Definition	3-8
3.5.5	Scanner Output Cabling	3-9
3.5.6	Scanner Control Connector Definition	3-10
3.5.7	Scanner Control Cabling	3-10
3.5.8	Using the Scan Control Signals Without A Scanner	3-10
3.5.9	Scanner Mounting Bracket	3-11
3.6	MONITOR AND REFERENCE OUTPUTS	3-12
3.6.1	Monitor Voltage Output	3-12
3.6.2	Reference Voltage Output	3-12
3.7	CONTROL HEATER OUTPUT	3-12
3.7.1	Heater Output Isolation	3-12
3.7.2	Heater Output Connection	3-13
3.7.3	Heater Output Cabling	3-13
3.7.4	Calculating Control Heater Power	3-13
3.7.5	Heater Output Protection	3-13
3.7.6	Boosting Heater Power Above 1W	3-14
3.8	ANALOG OUTPUT AND STILL HEATER OUTPUT	3-14
3.8.1	Analog Output Connections	3-14
3.8.2	Calculating Still Heater Power	3-14
3.8.3	Calculating Still Heater Current	3-14
3.9	RELAY CONNECTION	3-15
3.10	RACK MOUNTING	3-15
4	**OPERATION**	**4-1**
4.0	GENERAL	4-1
4.1	TURNING POWER ON	4-1
4.2	DISPLAY DEFINITION	4-1
4.2.1	Reading Display	4-2
4.2.2	Display Update Indicator	4-2
4.2.3	Range, Excitation and Power	4-2
4.2.4	Display and LED Annunciators	4-2
4.2.5	Temperature Control Display	4-3
4.3	KEPAD DEFINITION	4-3
4.3.1	Key Descriptions	4-3
4.3.2	General Keypad Operation	4-4
4.4	DISPLAY SETUP	4-4
4.4.1	Display Setup and Units Selection	4-4
4.4.2	Display Resolution	4-6
4.4.3	Display Brightness	4-6
4.5	EXCITATION MODES, RESISTANCE RANGE, AND AUTORANGE	4-6
4.5.1	Voltage Excitation Mode	4-7
4.5.2	Current Excitation Mode	4-7
4.5.3	Turning Excitation Off	4-8
4.6	INPUT SETUP	4-8
4.6.1	Channel Selection	4-9
4.6.2	Scanner Dwell Time	4-9
4.6.3	Change Pause Time	4-9
4.6.4	Selecting a Temperature Response Curve	4-10
4.6.5	Temperature Coefficient	4-10
4.6.6	Turning A Channel On or Off	4-10
4.7	INSTRUMENT SETUP	4-11
4.7.1	Frequency Selection	4-11
4.7.2	Active Common Mode Reduction	4-11
4.7.3	Guard Drive	4-11
4.7.4	Monitor Output Selection	4-12

TABLE OF CONTENTS (Continued)

Chapter/Paragraph	*Title*	*Page*
4.7.5	Range and Excitation Keys for One or All Channels	4-12
4.8	MODEL 3716 SCANNER OPERATION	4-12
4.8.1	Channel On or Off	4-12
4.8.2	Manual Scanner Channel Selection	4-13
4.8.3	Automatic Scanning	4-13
4.8.4	Settings for Multiple Channels	4-13
4.9	FIRMWARE FILTER	4-13
4.10	TEMPERATURE MEASUREMENT	4-15
4.10.1	Curve Selection	4-15
4.10.2	Temperature Display	4-15
4.11	TEMPERATURE CONTROL	4-15
4.11.1	Temperature Control Modes	4-15
4.11.2	Control Setup	4-16
4.11.2.1	Setting Control Mode	4-16
4.11.2.2	Control Channel	4-16
4.11.2.3	Setpoint Units	4-17
4.11.2.4	Setpoint Change Pause Time	4-17
4.11.2.5	Control Filter	4-17
4.11.2.6	Heater Output Display	4-18
4.11.2.7	Heater Resistance	4-18
4.11.2.8	Heater Range Limit	4-18
4.11.2.9	Heater Polarity	4-19
4.11.3	Changing Setpoint	4-19
4.11.4	Manually Setting PID Values	4-20
4.11.4.1	Manually Setting Proportional (P)	4-20
4.11.4.2	Manually Setting Integral (I)	4-20
4.11.4.3	Manually Setting Derivative (D)	4-20
4.11.5	Manual Heater Output	4-21
4.11.6	Heater Output Range and Heater Output Off	4-21
4.11.7	Setpoint Ramp	4-22
4.11.8	Controlling and Scanning	4-23
4.11.8.1	Reading Sequence	4-23
4.11.8.2	Settling Time	4-23
4.12	MAX/MIN CAPTURE	4-23
4.13	LINEAR EQUATION (ΔR)	4-24
4.14	ALARMS	4-26
4.15	RELAYS	4-29
4.16	ANALOG OUTPUTS	4-30
4.17	STILL OUTPUT	4-32
4.18	LOCKING THE KEYPAD	4-33
4.19	DEFAULT PARAMETER VALUES	4-33
5	**ADVANCED OPERATION**	**5-1**
5.0	GENERAL	5-1
5.1	CURVE NUMBERS AND STORAGE	5-1
5.1.1	Curve Header Parameters	5-1
5.1.2	Curve Breakpoints	5-1
5.1.3	CalCurve™	5-2
5.2	FRONT PANEL CURVE ENTRY OPERATIONS	5-2
5.2.1	Edit Curve	5-2
5.2.2	Erase Curve	5-5
5.2.3	Copy Curve	5-6
5.3	ZONE TUNING	5-7
5.3.1	Entering Zone Parameter Values	5-7
5.3.2	Using Zone Tuning	5-10

TABLE OF CONTENTS (Continued)

Chapter/Paragraph	*Title*	*Page*
6	**COMPUTER INTERFACE OPERATION**	**6-1**
6.0	GENERAL	6-1
6.1	IEEE-488 INTERFACE	6-1
6.1.1	Changing IEEE-488 Interface Parameters	6-1
6.1.2	Remote/Local Operation	6-2
6.1.3	IEEE-488 Command Structure	6-2
6.1.4	Status Registers	6-4
6.1.4.1	Status Byte Register and Service Request Enable Register	6-4
6.1.4.2	Standard Event Status Register and Standard Event Status Enable Register	6-4
6.1.5	IEEE Interface Example Programs	6-5
6.1.5.1	IEEE-488 Interface Board Installation for Visual Basic Program	6-5
6.1.5.2	Visual Basic IEEE-488 Interface Program Setup	6-7
6.1.5.3	Program Operation	6-10
6.1.6	Troubleshooting	6-10
6.2	SERIAL INTERFACE OVERVIEW	6-11
6.2.1	Changing Baud Rate	6-11
6.2.2	Physical Connection	6-11
6.2.3	Hardware Support	6-12
6.2.4	Character Format	6-12
6.2.5	Message Strings	6-12
6.2.6	Message Flow Control	6-13
6.2.7	Serial Interface Example Programs	6-13
6.2.7.1	Visual Basic Serial Interface Program Setup	6-14
6.2.7.2	Program Operation	6-17
6.2.8	Troubleshooting	6-17
6.3	COMMAND SUMMARY	6-18
6.3.1	Interface Commands	6-20
7	**OPTIONS AND ACCESSORIES**	**7-1**
7.0	GENERAL	7-1
7.1	MODELS	7-1
7.2	OPTIONS	7-2
7.3	ACCESSORIES	7-2
8	**SERVICE**	**8-1**
8.0	GENERAL	8-1
8.1	CONTACTING LAKE SHORE CRYOTRONICS	8-1
8.2	RETURNING PRODUCTS TO LAKE SHORE	8-1
8.3	FUSE DRAWER	8-2
8.4	LINE VOLTAGE SELECTION	8-2
8.5	FUSE REPLACEMENT	8-3
8.6	ERROR MESSAGES	8-3
8.7	TROUBLESHOOTING	8-4
8.8	ENCLOSURE TOP REMOVAL AND REPLACEMENT	8-8
8.9	ELECTROSTATIC DISCHARGE	8-9
8.10	FIRMWARE REPLACEMENT	8-9
8.11	CONNECTOR AND CABLE DEFINITIONS	8-11
8.12	MODEL 370 CALIBRATION	8-16
8.13	MODEL 3716 SCANNER CALIBRATION	8-26
APPENDIX A – GLOSSARY OF TERMINOLOGY		**A-1**
APPENDIX B – TEMPERATURE SCALES		**B-1**
APPENDIX C – HANDLING OF LIQUID HELIUM AND NITROGEN		**C-1**

LIST OF ILLUSTRATIONS

Figure No.	*Title*	*Page*
1-1	Model 370 Front Panel	1-1
2-1	Dilution Refrigerator Block Diagram	2-2
2-2	^{3}He Cryostat Block Diagram	2-3
2-3	Single-Stage ADR Block Diagram	2-4
2-4	Examples of PID Control	2-20
3-1	Model 370 Rear Panel	3-2
3-2	Line Input Assembly	3-3
3-3	Resistance Input Connectors	3-4
3-4	Twisted Shielded Cables	3-4
3-5	Guarded Shielded Cables	3-5
3-6	Example of Instrument Grounding	3-6
3-7	Model 3716 Scanner Front and Rear Panels	3-7
3-8	Model 3716 Scanner Resistor Input Connector	3-8
3-9	Model 3716 Scanner to Instrument Measurement Cable	3-9
3-10	Model 3716 SCAN CONTROL Connector	3-10
3-11	SCAN CONTROL Signals Without A Scanner	3-11
3-12	Model 3716 Scanner Mounting Bracket Footprint	3-11
3-13	Monitor and Reference Connectors	3-12
3-14	Control Heater Output Connector	3-12
3-15	Analog Output Connectors	3-14
3-16	Alarm Relays Terminal Block	3-15
3-17	Model RM-1 Rack Mount Kit Assembly	3-15
4-1	Model 370 Display	4-1
4-2	Deadband Example	4-26
4-3	Unipolar Versus Bipolar Analog Output	4-32
5-1	Record of Zone Settings	5-11
6-1	GPIB Setting Configuration	6-6
6-2	DEV 12 Device Template Configuration	6-6
7-1	Model 112-374 Cable Assembly	7-4
8-1	Fuse Drawer	8-2
8-2	Power Fuse Access	8-2
8-3	Signal Flow Block Diagram	8-8
8-4	Location Of Important Internal Components	8-10
8-5	SCAN CONTROL Connector Details	8-11
8-6	Resistor Sensor INPUT Connectors	8-12
8-7	REFERENCE and MONITOR Connector Details	8-12
8-8	HEATER OUTPUT Connector Details	8-12
8-9	ANALOG OUT 1 and 2 (STILL) Connector Details	8-12
8-10	ALARM RELAYS Terminal Block	8-13
8-11	RS-232 (DTE) Connector Details	8-13
8-12	IEEE-488 Rear Panel Connector Details	8-15
B-1	Temperature Scale Comparison	B-1
C-1	Typical Cryogenic Storage Dewar	C-1

LIST OF TABLES

Table No.	*Title*	*Page*
1-1	Voltage Range	1-5
3-1	Heater Resistance	3-13
4-1	Default Parameter Values	4-34
5-1	Curve Header Parameters	5-2
5-2	Recommended Curve Parameters	5-3
6-1	IEEE-488 Interface Program Control Properties	6-8
6-2	Visual Basic IEEE-488 Interface Program	6-9
6-3	Serial Interface Specifications	6-12
6-4	Serial Interface Program Control Properties	6-15
6-5	Visual Basic Serial Interface Program	6-16
6-6	Command Summary	6-19
8-1	Instrument Hardware Messages	8-9
8-2	Measurement or Compliance Limit Messages	8-9
8-3	Illegal Operation Messages	8-9
B-1	Temperature Conversion Table	B-2
C-1	Comparison of Liquid Helium and Liquid Nitrogen	C-1

CHAPTER 1
INTRODUCTION

1.0 GENERAL

This chapter provides an introduction to the Model 370 AC Resistance Bridge. The Model 370 was designed and manufactured in the United States of America by Lake Shore Cryotronics, Inc. The Model 370 features include the following.

Model 370 Features

- Resistance measurement ranges from 2 mΩ to 2 MΩ
- 21 excitation levels from 3.16 pA to 31.6 mA
- Displays real-time sensor excitation power
- One sensor input (up to 8 or 16 with scanner)
- PID temperature control
- IEEE-488 and RS-232C interfaces, alarms, relays, and analog outputs
- Unique noise-reduction elements:
    - Patented* current source preserves common mode noise rejection
    - Optically isolated measurement electronics eliminates the potential for ground loops

Two 16-channel scanners:

- Model 3716 scanner is optimized for low DC bias current
- Model 3716L scanner is optimized for low noise

8-channel preamp/scanner:

- Model 3708 scanner is optimized for ultra-low noise AC resistance measurements

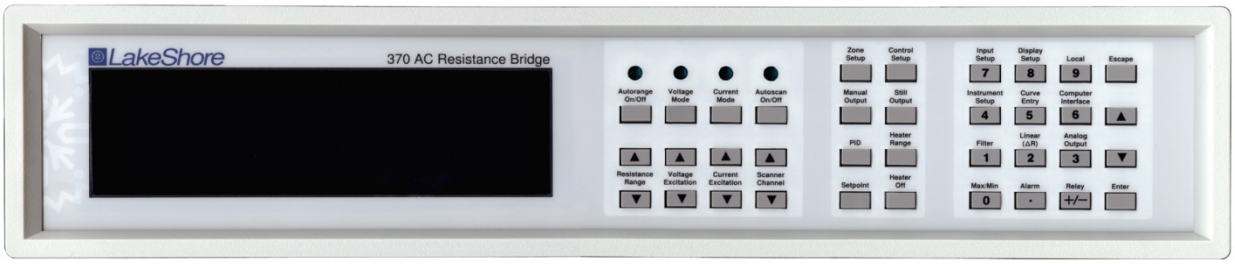

Front.bmp

Figure 1-1. Model 370 Front Panel

** U.S. Patent #6,501,255, Dec., 2002, "Differential current source with active common mode reduction," Lake Shore Cryotronics, Inc.*

1.1 DESCRIPTION

The Model 370 AC Resistance Bridge is designed for precise, accurate, low noise, low excitation power AC resistance measurement. Its primary application is the measurement of resistance materials in cryogenic environments from 20 mK to 1 K. Fully integrated, the Model 370 includes features to reduce and control noise at every step of the resistance measurement process. A unique, patented, matched impedance current source and active common mode reduction circuitry minimize noise and self-heating errors. With 16 channels, IEEE-488 and serial interfaces, and closed loop temperature control, the Model 370 offers seamless integration with existing cryogenic systems and is the most complete package on the market today. Used with Lake Shore calibrated subkelvin resistance temperature sensors, it not only measures and displays but also controls temperature for dilution refrigerators and other cryogenic systems.

Resistance Measurement

With the same attention to precision and detail that helped Lake Shore become the world leader in subkelvin temperature sensors, the Model 370 AC Resistance Bridge combines a full range of design strategies which optimize resolution and minimize measurement uncertainty in low power resistance measurement.

The Model 370 uses four-lead AC measurement for the best possible accuracy with the lowest possible excitation current. AC coupling at each amplifier stage reduces offsets for higher gain and greater sensitivity than DC techniques allow. Phase sensitive detection, an AC filtering technique used in lock-in amplifiers, reclaims small measurement signals from environmental noise. A low excitation frequency at 13.7 Hz reduces the effect of lead capacitance on measurement. These features, in conjunction with innovative lead shielding and active noise reduction circuitry, significantly reduce measurement noise and resistor self-heating.

The Model 370 current excitation source provides stable, reliable, low power excitation current. Twenty-one AC current levels from 3.16 pA to 31.6 mA RMS offer low noise with no significant DC component to contribute to sensor self-heating. Two operating modes provide excitation control options to meet user and application needs.

Performance Enhancement

Innovative features enhance the performance of the Model 370 from excitation to output. Common mode voltage can come from many sources, including external noise coupling into the lead wires. The Model 370 provides a unique, patented, matched impedance current source as its first defense against common mode noise. Just as voltage input terminals for a differential input have the same input impedance, the two current source output terminals of the Model 370 have the same source impedance. This matched impedance ensures that common mode voltages do not become normal mode voltages. With this strategy, the differential input remains truly differential for accurate resistance measurement.

To further reduce the effect of common mode voltage, the Model 370 includes an active common mode reduction circuit. This circuit dynamically adjusts the current source output operation point to minimize common mode voltage at the measurement input. Active common mode reduction allows the Model 370 to operate in environments that would otherwise saturate the differential input amplifiers.

Optocouplers isolate the analog front end of the Model 370 from digital circuitry and the instrument chassis. Optical isolation minimizes the effect of digital noise on the measurement and breaks ground loops.
For applications where lead length is greater than 10 ft, or resistance is greater than 100 kΩ, the Model 370 also includes four separate driven guards that follow the voltage on each lead to provide the lowest possible voltage difference between the lead and its shield. Driven guards reduce the effect of cable capacitance and provide the best possible shielding. Driven guards are not available for scanned inputs.

To accommodate conversion of changing output from phase sensitive detection to a stable signal, the Model 370 operates with a 200 ms minimum filter time constant. While this is adequate for measurement of small resistance values with large excitation, the Model 370 software provides additional filtering to ensure good resolution as resistance increases and excitation decreases. Linear filtering or averaging offers the best possible settling time, with selections from 1 s to 200 s.

Excitation Modes

The Model 370 provides full scale resistance ranges from 2 mΩ to 2 MΩ. The selected resistance range is continuously displayed; excitation power dissipated in the resistor is also continuously calculated and displayed. The Model 370 includes both a current excitation mode and a voltage mode for resistor excitation. Current excitation is the instrument's primary mode of operation. In current mode, the Model 370 provides the appropriate voltage gain when the resistance range and a fixed excitation current are selected. The instrument changes gain when the resistance range is changed. In current mode, the actual excitation current is continuously displayed.

In voltage mode, the Model 370 firmware simulates voltage excitation. In voltage mode, the instrument changes the current to maintain the voltage limit when the resistance range is changed. Because voltage is limited in voltage mode, excitation power decreases as resistance increases and temperature decreases when negative temperature coefficient (NTC) resistance materials are measured. As a result, voltage mode provides a convenient way to limit excitation power and resistor self-heating for NTC resistance temperature sensors. In voltage mode, the upper input voltage limit but not the actual voltage is continuously displayed.

Autorange and Manual Range

The Model 370 autorange and manual range selection functions of the Model 370 are available for use with both current excitation mode and voltage mode. The autorange function increases or decreases the resistance range when measured resistance exceeds or falls below the range in use. In current mode, the autorange function modifies the voltage gain. In voltage mode, autorange modifies the current setting.

Manual range selection provides the option of full user control. With manual range selection, the user selects excitation as well as resistance range; ranges do not change automatically. If input resistance exceeds the range, an overload message appears. With both autorange and manual range selection, the excitation current source is shorted inside the Model 370 during range changes to minimize transients.

Temperature Conversion

The Model 370 temperature conversion function converts measured resistance to temperature for calibrated resistance thermometers. Temperature as well as resistance values can be displayed; temperature and resistance values are also available for interface query. Conversion is based on temperature response curve data loaded into the instrument for each calibrated resistance thermometer in use. Up to twenty 200-point curves can be entered into nonvolatile memory via computer interface or the instrument front panel. Lake Shore CalCurves™ are available for Lake Shore calibrated sensors; users can also generate their own curves as desired.

Temperature Control

The Model 370 provides all of the circuitry and software for digital proportional-integral-derivative (PID) control. Heater output is a variable DC current source with multiple power ranges from 0.1 μW to 1 W to drive a resistive heater (nominal 100 Ω). Heater output is designed for low noise, with circuits to eliminate power surges during range changes or at instrument start-up. A still heater function can also supply up to 1 W of power into a still heater load (nominal 100 Ω) by way of one of the instrument's analog outputs to enhance temperature control. The best control stability is achieved using only one sensor, but the Model 370 can control temperature based on one of multiple scanned sensors. Because the Model 370 alternates control with scanned sensor readings and the alternating update rate is slower than operation based on a single sensor, control stability may degrade in some systems when multiple sensors are in use.

Computer Interfaces

The Model 370 includes IEEE-488.2 parallel and RS-232C serial interfaces. Both use the instrument chassis as ground, while measurement input is optically isolated from the chassis to minimize interface noise and ground loops. Both interfaces can accommodate data transmission at the maximum reading rate of the Model 370 for automated data recording. All instrument parameters, all available status information, and almost every instrument function, including analog voltage outputs and relays, can be accessed by computer interface.

Analog Outputs

With two analog voltage outputs and two relays, the Model 370 can perform functions that might otherwise require additional hardware and system complexity. Configured for use as resistance monitors, the analog voltage outputs provide a voltage proportional to measured resistance that can be used to monitor resistance error (ΔR), temperature, or temperature error. Analog outputs can be controlled manually from the front panel, by computer interface, and for some functions, by the Model 370 internal operating modes. Closed loop control is not available for analog output functions.

Configurable Display

The Model 370 includes an eight line by forty character vacuum fluorescent display. Input readings can be displayed in mΩ, Ω, kΩ, MΩ, mK, or K.

Scanners for the Model 370

Three custom scanners are available with the Model 370, the Model 3716, 3716L, and the 3708. These are designed specifically to increase the Model 370 input capability from 1 to either 8 or up to 16 resistors without sacrificing measurement performance.

Each scanner is housed in a separate enclosure and can be mounted directly on the cryostat so leads carrying the most sensitive low voltage signals are as short as possible. The scanner also allows extension of the Model 370 shield to all resistor leads. A preamplifier in the scanner amplifies measurement signals before they travel through the longer leads to the Model 370. Different preamplifiers in the 3716, 3716L, and 3708 optimize them for different applications. The Model 370 supplies power and control to the scanner, eliminating additional noise from AC power lines, ground loops, and computer interface connections.

Scanner operation is fully integrated so most of the Model 370 hardware and firmware features can be used with the scanner. Supported hardware features include matched impedance current source and ground isolation. The scanners provide up to four 25-pin D-sub connectors for resistance inputs. Each connector accommodates four inputs, with four signal and two shield lines for each input. Guarding is supported between the instrument and scanner only. Interface cables from the Model 370 to the scanner are included with the scanner.

Supported firmware features include temperature conversion, math functions, linear equations, and in some applications, temperature control. The Model 370 can store measurement range and temperature conversion data for each resistor. Appropriate parameter values are automatically recalled with input changes, reducing interface overhead and settling time. As with any scanner, the resistance reading rate is slower during input changes, resulting in longer filter settling times and a longer sample period for temperature control. The Model 370 can be used with third party scanners; however, access to integrated features is lost.

The Model 3716 Scanner

The Model 3716 mirrors the single input of the Model 370 that is optimized for low residual DC bias current. Low bias provides the lowest available resistor self-heating when excitation currents are in the range of 1 pA to 30 pA. It also provides the best available accuracy when resistances are above 200 kΩ. The tradeoff for these performance features is a slightly greater noise figure (33 nV/√Hz) than the Models 3716L and 3708. Unused leads are connected to measurement common to reduce noise pickup, a persistent problem when measuring large resistances. Performance of the Model 3716 scanner is so nearly identical to the Model 370 that they share specifications for resistance range, accuracy, and resolution (noise).

The Model 3716L Low Resistance Scanner

The Model 3716L is optimized for low input noise figure (4 nV/√Hz) and can achieve measurement resolution to 20 nΩ. The scanner's lower noise figure actually improves the measurement resolution of a standalone Model 370 over much of its range. It is the best choice for general measurement applications that do not require excitation current below 100 pA and resistance above 100 kΩ. The 3716L also enables some measurements, such as low resistance Hall effect measurements, that would not be possible with the 3716. Unused leads are left open, allowing the scanner to perform Hall effect measurement sequencing. Please note that the specifications for resistance range, accuracy, and resolution (noise) are different than the standalone Model 370.

The Model 3708 Ultra-Low Resistance Preamp/Scanner

For ultra-low AC resistance measurement applications that demand the very best in low noise performance, the Model 3708 8-channel preamp/scanner is the best choice. At just 2 nVRMS/√Hz, the Model 3708 offers the lowest input voltage noise of the three available scanners and can achieve measurement resolution to 10 nΩ. The Model 3708 improves low ohmic and low resistance Hall effect measurement capability by a factor of two over the Model 3716L. Like the Model 3716L, unused leads are left open to facilitate Hall effect measurement sequencing. With DC bias current of 55 pA, however, it is not recommended for subkelvin temperature measurements. These measurements require very low DC bias current to prevent measurement errors as a result of self heating. Specifications for resistance range, accuracy, and resolution (noise) are different than the standalone Model 370.

1.2 SENSOR PERFORMANCE

Lake Shore Germanium GR-200A-30

Sensor Properties				Excitation and Instrumentation			
Temperature (K)	Resistance	dR/dT	Thermal Resistance	Resistance Range	Excitation Voltage Limit	Excitation Current	Power
0.05	25 kΩ	–3.5 MΩ/K	200 mK/nW	63.2 kΩ	63.2 µV	1 nA	25 fW
0.1	2 kΩ	–60 kΩ/K	20 mK/nW	6.32 kΩ	63.2 µV	10 nA	200 fW
0.3	172 Ω	–890 Ω/K	4 mK/nW	632 Ω	200 µV	316 nA	17 pW
1	42 Ω	–36 Ω/K	0.1 mK/nW	200 Ω	200 µV	1 µA	42 pW

Instrument Performance			Overall Performance			
Temperature (K)	Measurement Resolution	Electronic Accuracy	Calibration Accuracy	Self-Heating Errors	Interpolation Error	Overall Accuracy
0.05	6 Ω (1.7 µK)	±13.8 Ω (3.9 µK)	±5 mK	5 µK	±0.2 mK	±5.2 mK
0.1	300 mΩ (5 µK)	±1.13 Ω (19 µK)	±5 mK	4 µK	±0.2 mK	±5.2 mK
0.3	10 mΩ (11 µK)	±64.2 mΩ (72 µK)	±5 mK	68 µK	±0.2 mK	±5.3 mK
1	3 mΩ (83 µK)	±16.6 mΩ (461 µK)	±5 mK	5 µK	±0.2 mK	±5.7 mK

Lake Shore 1000 Ω Ruthenium Oxide

Sensor Properties				Excitation and Instrumentation			
Temperature (K)	Resistance	dR/dT	Thermal Resistance	Resistance Range	Excitation Voltage Limit	Excitation Current	Power
0.05	70 kΩ	–5.0 MΩ/K	7000 mK/nW	200 kΩ	63.2 µV	316 pA	7 fW
0.1	19.3 kΩ	–266 kΩ/K	800 mK/nW	20 kΩ	63.2 µV	3.16 nA	193 fW
0.3	5.6 kΩ	–16.6 kΩ/K	50 mK/nW	6.32 kΩ	200 µV	31.6 nA	5.6 fW
1	2.3 kΩ	–1.2 kΩ/K	8 mK/nW	6.32 kΩ	200 µV	31.6 nA	2.3 pW

Instrument Performance			Overall Performance			
Temperature (K)	Measurement Resolution	Electronic Accuracy	Calibration Accuracy	Self-Heating Errors	Interpolation Error	Overall Accuracy
0.05	40 Ω (8 µK)	35 Ω (7 µK)	±5 mK	49 µK	±0.2 mK	±5.2 mK
0.1	1 Ω (3.8 µK)	9.7 Ω (36 µK)	±5 mK	155 µK	±0.2 mK	±5.2 mK
0.3	0.1 Ω (6 µK)	2.8 Ω (170 µK)	±5 mK	280 µK	±0.2 mK	±5.4 mK
1	0.1 Ω (83 µK)	0.7 Ω (580 µK)	±5 mK	18 µK	±0.2 mK	±5.8 mK

NOTES:

1. Recommended operating range of GR-200A-30 is from 50 mK to 1 K, but it can be used beyond this range.
2. Excitation chosen to minimize sensor self-heating.
3. Typical thermal resistance with minimal heat sinking; can be improved with permanent installation.
4. Typical sensor characteristics; individual sensors vary in resistance and sensitivity.

Excitation Power = Actual Current^2 × Measured Resistance
Resolution (Temperature) = Resolution (Resistance)/dR/dT
Electronic Accuracy (Temperature) = Electronic Accuracy (Resistance)/dR/dT
Self-Heating = Excitation Power × Thermal Resistance

Table 1-1,2 and 3 Information

Accuracy: Percent reading (specified on facing page) + 0.005% of range.

Precision: Dominated by measurement temperature coefficient (±0.0015% of reading ±0.0002% of range)/°C.

Resistance: Full scale resistance range, nominal 20% over range.

Resolution: RMS noise with 18 s filter settling time (approximates 3 s analog time constant).

Power: Excitation power at one-half full scale resistance.

* Range not available. ** Range available, not specified.

200 kΩ — resistance range
100 Ω — resolution
1.0 fw — power

Accuracy: ±0.03% ±0.05% ±0.1% ±0.3%

Table 1-1. Model 370/3716 Voltage Range

	632 mV	200 mV	63.2 mV	20 mV	6.32 mV	2.0 mV	632 µV	200 µV	63.2 µV	20 µV	6.32 µV	2.0 µV
31.6 mA	20 Ω 20 µΩ 10 mW	6.32 Ω 6 µΩ 3.2 mW	2.0 Ω 2 µΩ 1 mW	632 mΩ 1.3 µΩ 320 µW	200 mΩ 400 nΩ 100 µW	63.2 mΩ 130 nΩ 32 µW	20 mΩ 100 nΩ 10 µW	6.32 mΩ 100 nΩ 3.2 µW	2.0 mΩ 100 nΩ 1 µW	* * *	* * *	* * *
10 mA	63.2 Ω 60 µΩ 3.2 mW	20 Ω 20 µΩ 1 mW	6.32 Ω 6 µΩ 320 µW	2.0 Ω 4 µΩ 100 µW	632 mΩ 1.3 µΩ 32 µW	200 mΩ 0.4 µΩ 10 µW	63.2 mΩ 0.3 µΩ 3.2 µW	20 mΩ 0.3 µΩ 1 µW	6.32 mΩ 0.3 µΩ 320 nW	2.0 mΩ 0.3 µΩ 100 nW	* * *	* * *
3.16 mA	200 Ω 200 µΩ 1 mW	63.2 Ω 60 µΩ 320 µW	20 Ω 20 µΩ 100 µW	6.32 Ω 13 µΩ 32 µW	2.0 Ω 4 µΩ 10 µW	632 mΩ 1.3 µΩ 3.2 µW	200 mΩ 1 µΩ 1 µW	63.2 mΩ 1 µΩ 320 nW	20 mΩ 1 µΩ 100 nW	6.32 mΩ 1 µΩ 32 nW	2.0 mΩ 1 µΩ 10 nW	* * *
1 mA	632 Ω 600 µΩ 320 µW	200 Ω 200 µΩ 100 µW	63.2 Ω 60 µΩ 32 µW	20 Ω 40 µΩ 10 µW	6.32 Ω 13 µΩ 3.2 µW	2.0 Ω 4 µΩ 1 µW	632 mΩ 3 µΩ 320 nW	200 mΩ 3 µΩ 100 nW	63.2 mΩ 3 µΩ 32 nW	20 mΩ 3 µΩ 10 nW	6.32 mΩ 3 µΩ 3.2 nW	2.0 mΩ 3 µΩ 1 nW
316 µA	2.0 kΩ 2 mΩ 100 µW	632 Ω 600 µΩ 32 µW	200 Ω 200 µΩ 10 µW	63.2 Ω 130 µΩ 3.2 µW	20 Ω 40 µΩ 1 µW	6.32 Ω 13 µΩ 320 nW	2.0 Ω 10 µΩ 100 nW	632 mΩ 10 µΩ 32 nW	200 mΩ 10 µΩ 10 nW	63.2 mΩ 10 µΩ 3.2 nW	20 mΩ 10 µΩ 1 nW	6.32 mΩ 10 µΩ 320 pW
100 µA	6.32 kΩ 6 mΩ 32 µW	2.0 kΩ 2 mΩ 10 µW	632 Ω 600 µΩ 3.2 µW	200 Ω 400 µΩ 1 µW	63.2 Ω 130 µΩ 320 nW	20 Ω 40 µΩ 100 nW	6.32 Ω 30 µΩ 32 nW	2.0 Ω 30 µΩ 10 nW	632 mΩ 30 µΩ 3.2 nW	200 mΩ 30 µΩ 1 nW	63.2 mΩ 30 µΩ 320 pW	20 mΩ 30 µΩ 100 pW
31.6 µA	20 kΩ 20 mΩ 10 µW	6.32 kΩ 6 mΩ 3.2 µW	2.0 kΩ 2 mΩ 1 µW	632 Ω 1.3 mΩ 320 nW	200 Ω 400 µΩ 100 nW	63.2 Ω 130 µΩ 32 nW	20 Ω 100 µΩ 10 nW	6.32 Ω 100 µΩ 3.2 nW	2.0 Ω 100 µΩ 1 nW	632 mΩ 100 µΩ 320 pW	200 mΩ 100 µΩ 100 pW	63.2 mΩ 100 µΩ 32 pW
10 µA	63.2 kΩ 60 mΩ 3.2 µW	20 kΩ 20 mΩ 1 µW	6.32 kΩ 6 mΩ 320 nW	2.0 kΩ 4 mΩ 100 nW	632 Ω 1.3 mΩ 32 nW	200 Ω 400 µΩ 10 nW	63.2 Ω 300 µΩ 3.2 nW	20 Ω 300 µΩ 1 nW	6.32 Ω 300 µΩ 320 pW	2.0 Ω 300 µΩ 100 pW	632 mΩ 300 µΩ 32 pW	200 mΩ 300 µΩ 10 pW
3.16 µA	200 kΩ 200 mΩ 1 µW	63.2 kΩ 60 mΩ 320 nW	20 kΩ 20 mΩ 100 nW	6.32 kΩ 13 mΩ 32 nW	2.0 kΩ 4 mΩ 10 nW	632 Ω 1.3 mΩ 3.2 nW	200 Ω 1 mΩ 1 nW	63.2 Ω 1 mΩ 320 pW	20 Ω 1 mΩ 100 pW	6.32 Ω 1 mΩ 32 pW	2.0 Ω 1 mΩ 10 pW	632 mΩ 1 mΩ 3.2 pW
1.0 µA	632 kΩ 600 mΩ 320 nW	200 kΩ 200 mΩ 100 nW	63.2 kΩ 60 mΩ 32 nW	20 kΩ 40 mΩ 10 nW	6.32 kΩ 13 mΩ 3.2 nW	2.0 kΩ 4 mΩ 1 nW	632 Ω 3 mΩ 320 pW	200 Ω 3 mΩ 100 pW	63.2 Ω 3 mΩ 32 pW	20 Ω 3 mΩ 10 pW	6.32 Ω 3 mΩ 3.2 pW	2.0 Ω 3 mΩ 1.0 pW
316 nA	2.0 MΩ 2.0 Ω 100 nW	632 kΩ 600 mΩ 32 nW	200 kΩ 200 mΩ 10 nW	63.2 kΩ 130 mΩ 3.2 nW	20 kΩ 40 mΩ 1 nW	6.32 kΩ 13 mΩ 320 pW	2.0 kΩ 10 mΩ 100 pW	632 Ω 10 mΩ 32 pW	200 Ω 10 mΩ 10 pW	63.2 Ω 10 mΩ 3.2 pW	20 Ω 10 mΩ 1.0 pW	6.32 Ω 10 mΩ 320 fW
100 nA	6.32 MΩ ** 32 nW	2.0 MΩ 2.0 Ω 10 nW	632 kΩ 600 mΩ 3.2 nW	200 kΩ 400 mΩ 1.0 nW	63.2 kΩ 130 mΩ 320 pW	20 kΩ 40 mΩ 100 pW	6.32 kΩ 30 mΩ 32 pW	2.0 kΩ 30 mΩ 10 pW	632 Ω 30 mΩ 3.2 pW	200 Ω 30 mΩ 1.0 pW	63.2 Ω 30 mΩ 320 fW	20 Ω 30 mΩ 100 fW
31.6 nA	20 MΩ ** 10 nW	6.32 MΩ ** 3.2 nW	2.0 MΩ 2.0 Ω 1 nW	632 kΩ 1.3 Ω 320 pW	200 kΩ 400 mΩ 100 pW	63.2 kΩ 130 mΩ 32 pW	20 kΩ 100 mΩ 10 pW	6.32 kΩ 100 mΩ 3.2 pW	2.0 kΩ 100 mΩ 1.0 pW	632 Ω 100 mΩ 320 fW	200 Ω 100 mΩ 100 fW	63.2 Ω 100 mΩ 32 fW
10 nA	63.2 MΩ ** 3.2 nW	20 MΩ ** 1 nW	6.32 MΩ ** 320 pW	2.0 MΩ 6.0 Ω 100 pW	632 kΩ 2.0 Ω 32 pW	200 kΩ 1 Ω 10 pW	63.2 kΩ 600 mΩ 3.2 pW	20 kΩ 400 mΩ 1.0 pW	6.32 kΩ 300 mΩ 320 fW	2.0 kΩ 300 mΩ 100 fW	632 Ω 300 mΩ 32 fW	200 Ω 300 mΩ 10 fW
3.16 nA	* * *	63.2 MΩ ** 320 pW	20 MΩ ** 100 pW	6.32 MΩ ** 32 pW	2.0 MΩ 10 Ω 10 pW	632 kΩ 6.0 Ω 3.2 pW	200 kΩ 4.0 Ω 1.0 pW	63.2 kΩ 2.0 Ω 320 fW	20 kΩ 1.0 Ω 100 fW	6.32 kΩ 1.0 Ω 32 fW	2.0 kΩ 1.0 Ω 10 fW	632 Ω 1.0 Ω 3.2 fW
1.0 nA	* * *	* * *	63.2 MΩ ** 32 pW	20 MΩ ** 10 pW	6.32 MΩ ** 3.2 pW	2.0 MΩ 40 Ω 1.0 pW	632 kΩ 20 Ω 320 fW	200 kΩ 10 Ω 100 fW	63.2 kΩ 6.0 Ω 32 fW	20 kΩ 4.0 Ω 10 fW	6.32 kΩ 3.0 Ω 3.2 fW	2.0 kΩ 3.0 Ω 1.0 fW
316 pA	* * *	* * *	* * *	63.2 MΩ ** 3.2 pW	20 MΩ ** 1.0 pW	6.32 MΩ ** 320 fW	2.0 MΩ 100 Ω 100 fW	632 kΩ 60 Ω 32 fW	200 kΩ 40 Ω 10 fW	63.2 kΩ 25 Ω 3.2 fW	20 kΩ 16 Ω 1.0 fW	6.32 kΩ 10 Ω 320 aW
100 pA	* * *	* * *	* * *	* * *	63.2 MΩ ** 320 fW	20 MΩ ** 100 fW	6.32 MΩ ** 32 fW	2.0 MΩ 400 Ω 10 fW	632 kΩ 200 Ω 3.2 fW	200 kΩ 100 Ω 1.0 fW	63.2 kΩ 60 Ω 320 aW	20 kΩ 60 Ω 100 aW
31.6 pA	* * *	* * *	* * *	* * *	* * *	63.2 MΩ ** 32 fW	20 MΩ ** 10 fW	6.32 MΩ ** 3.2 fW	2.0 MΩ 1.0 kΩ 1.0 fW	632 kΩ 600 kΩ 320 aW	200 kΩ 300 Ω 100 aW	63.2 kΩ 200 mΩ 32 aW
10 pA	* * *	* * *	* * *	* * *	* * *	* * *	63.2 MΩ ** 3.2 fW	20 MΩ ** 1.0 fW	6.32 MΩ ** 320 aW	2.0 MΩ 3.0 kΩ 100 aW	632 kΩ 2.0 kΩ 32 aW	200 kΩ 1.0 kΩ 10 aW
3 16 pA	* * *	* * *	* * *	* * *	* * *	* * *	* * *	63.2 MΩ ** 320 aW	20 MΩ ** 100 aW	6.32 MΩ ** 32 aW	2.0 MΩ 10 kΩ 10 aW	632 kΩ 6.0 kΩ 3.2 aW
1.0 pA	* * *	* * *	* * *	* * *	* * *	* * *	* * *	* * *	63.2 MΩ ** 32 aW	20 MΩ ** 10 aW	6.32 MΩ ** 3.2 aW	2.0 MΩ ** 1.0 aW

Accuracy: ±0.5% ±1.0%

Accuracy: ±0.03% ±0.05% ±0.1% ±0.3%

Table 1-2. Model 370/3716L Voltage Range

	632 mV	200 mV	63.2 mV	20 mV	6.32 mV	2.0 mV	632 µV	200 µV	63.2 µV	20 µV	6.32 µV	2.0 µV
31.6 mA	20 Ω 20 µΩ 10 mW	6.32 Ω 6 µΩ 3.2 mW	2.0 Ω 2.0 µΩ 1.0 mW	632 mΩ 1.3 µΩ 320 µW	200 mΩ 400 nΩ 100 µW	63.2 mΩ 130 nΩ 32 µW	20 mΩ 40 nΩ 10 µW	6.32 mΩ 100 nΩ 3.2 µW	2.0 mΩ 20 nΩ 1.0 µW	632 µΩ 20 nΩ 320 nW	200 µΩ 20 nΩ 100 nW	63.2 µΩ 20 nΩ 32 nW
10 mA	63.2 Ω 60 µΩ 3.2 mW	20 Ω 20 µΩ 1 mW	6.32 Ω 6.0 µΩ 320 µW	2.0 Ω 4.0 µΩ 100 µW	632 mΩ 1.3 µΩ 32 µW	200 mΩ 400 nΩ 10 µW	63.2 mΩ 130 nΩ 3.2 µW	20 mΩ 60 nΩ 1.0 µW	6.32 mΩ 60 nΩ 320 nW	2.0 mΩ 60 nΩ 100 nW	632 µΩ 60 nΩ 32 nW	200 µΩ 60 nΩ 10 nW
3.16 mA	200 Ω 200 µΩ 1 mW	63.2 Ω 60 µΩ 320 µW	20 Ω 20 µΩ 100 µW	6.32 Ω 13 µΩ 32 µW	2.0 Ω 4.0 µΩ 10 µW	632 mΩ 1.3 µΩ 3.2 µW	200 mΩ 400 nΩ 1.0 µW	63.2 mΩ 200 nΩ 320 nW	20 mΩ 200 nΩ 100 nW	6.32 mΩ 200 nΩ 32 nW	2.0 mΩ 200 nΩ 10 nW	632 200 nΩ 3.2 nW
1.0 mA	632 Ω 600 µΩ 320 µW	200 Ω 200 µΩ 100 µW	63.2 Ω 60 µΩ 32 µW	20 Ω 40 µΩ 10 µW	6.32 Ω 13 µΩ 3.2 µW	2.0 Ω 4 µΩ 1 µW	632 mΩ 1.3 µΩ 320 nW	200 mΩ 600 nΩ 100 nW	63.2 mΩ 600 nΩ 32 nW	20 mΩ 600 nΩ 10 nW	6.32 mΩ 600 nΩ 3.2 nW	2.0 mΩ 600 nΩ 1.0 nW
316 µA	2.0 kΩ 2 mΩ 100 µW	632 Ω 600 µΩ 32 µW	200 Ω 200 µΩ 10 µW	63.2 Ω 130 µΩ 3.2 µW	20 Ω 40 µΩ 1.0 µW	6.32 Ω 13 µΩ 320 nW	2.0 Ω 4.0 µΩ 100 nW	632 mΩ 20 µΩ 32 nW	200 mΩ 2.0 µΩ 10 nW	63.2 mΩ 2.0 µΩ 3.2 nW	20 mΩ 2.0 µΩ 1.0 nW	6.32 mΩ 2.0 µΩ 320 pW
100 µA	6.32 kΩ 6.0 mΩ 32 µW	2.0 kΩ 2.0 mΩ 10 µW	632 Ω 600 µΩ 3.2 µW	200 Ω 400 µΩ 1.0 µW	63.2 Ω 130 µΩ 320 nW	20 Ω 40 µΩ 100 nW	6.32 Ω 13 µΩ 32 nW	2.0 Ω 6.0 µΩ 10 nW	632 mΩ 6.0 µΩ 3.2 nW	200 mΩ 6.0 µΩ 1.0 nW	63.2 mΩ 6.0 µΩ 320 pW	20 mΩ 6.0 µΩ 100 pW
31.6 µA	20 kΩ 20 mΩ 10 µW	6.32 kΩ 6.0 mΩ 3.2 µW	2.0 kΩ 2.0 mΩ 1 µW	632 Ω 1.3 mΩ 320 nW	200 Ω 400 µΩ 100 nW	63.2 Ω 130 µΩ 32 nW	20 Ω 40 µΩ 10 nW	6.32 Ω 20 µΩ 3.2 nW	2.0 Ω 20 µΩ 1.0 nW	632 mΩ 20 µΩ 320 pW	200 mΩ 20 µΩ 100 pW	63.2 mΩ 20 µΩ 32 pW
10 µA	63.2 kΩ 60 mΩ 3.2 µW	20 kΩ 20 mΩ 1.0 µW	6.32 kΩ 6.0 mΩ 320 nW	2.0 kΩ 4.0 mΩ 100 nW	632 Ω 1.3 mΩ 32 nW	200 Ω 400 µΩ 10 nW	63.2 Ω 130 µΩ 3.2 nW	20 Ω 60 µΩ 1.0 nW	6.32 Ω 60 µΩ 320 pW	2.0 Ω 60 µΩ 100 pW	632 mΩ 60 µΩ 32 pW	200 mΩ 60 µΩ 10 pW
3.16 µA	200 kΩ 200 mΩ 1.0 µW	63.2 kΩ 60 mΩ 320 nW	20 kΩ 20 mΩ 100 nW	6.32 kΩ 13 mΩ 32 nW	2.0 kΩ 4.0 mΩ 10 nW	632 Ω 1.3 mΩ 3.2 nW	200 Ω 400 µΩ 1.0 nW	63.2 Ω 200 µΩ 320 pW	20 Ω 200 µΩ 100 pW	6.32 Ω 200 µΩ 32 pW	2.0 Ω 200 µΩ 10 pW	632 mΩ 200 µΩ 3.2 pW
1.0 µA	632 kΩ 600 mΩ 320 nW	200 kΩ 200 mΩ 100 nW	63.2 kΩ 60 mΩ 32 nW	20 kΩ 40 mΩ 10 nW	6.32 kΩ 13 mΩ 3.2 nW	2.0 kΩ 4 mΩ 1.0 nW	632 Ω 1.3 mΩ 320 pW	200 Ω 600 µΩ 100 pW	63.2 Ω 600 µΩ 32 pW	20 Ω 600 µΩ 10 pW	6.32 Ω 600 µΩ 3.2 pW	2.0 Ω 600 µΩ 1.0 pW
316 nA	2.0 MΩ ** 100 nW	632 kΩ 600 mΩ 32 nW	200 kΩ 200 mΩ 10 nW	63.2 kΩ 130 mΩ 3.2 nW	20 kΩ 40 mΩ 1.0 nW	6.32 kΩ 13 mΩ 320 pW	2.0 kΩ 4.0 mΩ 100 pW	632 Ω 2.0 mΩ 32 pW	200 Ω 2.0 mΩ 10 pW	63.2 Ω 2.0 mΩ 3.2 pW	20 Ω 2.0 mΩ 1.0 pW	6.32 Ω 2.0 mΩ 320 fW
100 nA	6.32 MΩ ** 32 nW	2.0 MΩ ** 10 nW	632 kΩ 600 mΩ 3.2 nW	200 kΩ 400 mΩ 1.0 nW	63.2 kΩ 130 mΩ 320 pW	20 kΩ 40 mΩ 100 pW	6.32 kΩ 13 mΩ 32 pW	2.0 kΩ 10 mΩ 10 pW	632 Ω 6.0 mΩ 3.2 pW	200 Ω 6.0 mΩ 1.0 pW	63.2 Ω 6.0 mΩ 320 fW	20 Ω 6.0 mΩ 100 fW
31.6 nA	* * *	6.32 MΩ ** 3.2 nW	2.0 MΩ ** 1.0 nW	632 kΩ 1.3 Ω 320 pW	200 kΩ 400 mΩ 100 pW	63.2 kΩ 130 mΩ 32 pW	20 kΩ 60 mΩ 10 pW	6.32 kΩ 30 mΩ 3.2 pW	2.0 kΩ 30 mΩ 1.0 pW	632 Ω 20 mΩ 320 fW	200 Ω 20 mΩ 100 fW	63.2 Ω 20 mΩ 32 fW
10 nA	* * *	* * *	6.32 MΩ ** 320 pW	2.0 MΩ ** 100 pW	632 kΩ 2.0 Ω 32 pW	200 kΩ 600 mΩ 10 pW	63.2 kΩ 200 mΩ 3.2 pW	20 kΩ 200 mΩ 1.0 pW	6.32 kΩ 130 mΩ 320 fW	2.0 kΩ 100 mΩ 100 fW	632 Ω 60 mΩ 32 fW	200 Ω 60 mΩ 10 fW
3.16 nA	* * *	* * *	* * *	6.32 MΩ ** 32 pW	2.0 MΩ ** 10 pW	632 kΩ 2.0 Ω 3.2 pW	200 kΩ 2.0 Ω 1.0 pW	63.2 kΩ 630 mΩ 320 fW	20 kΩ 600 mΩ 100 fW	6.32 kΩ 320 mΩ 32 fW	2.0 kΩ 400 mΩ 10 fW	632 Ω 200 mΩ 3.2 fW
1.0 nA	* * *	* * *	* * *	* * *	6.32 MΩ ** 3.2 pW	2.0 MΩ ** 1.0 pW	632 kΩ 6.0 Ω 320 fW	200 kΩ 6.0 Ω 100 fW	63.2 kΩ 3.2 Ω 32 fW	20 kΩ 2.0 Ω 10 fW	6.32 kΩ 1.3 Ω 3.2 fW	2.0 kΩ 1.0 Ω 1.0 fW
316 pA	* * *	* * *	* * *	* * *	* * *	6.32 MΩ ** 320 fW	2.0 MΩ ** 100 fW	632 kΩ 20 Ω 32 fW	200 kΩ 20 Ω 10 fW	63.2 kΩ 10 Ω 3.2 fW	20 kΩ 6.0 Ω 1.0 fW	6.32 kΩ 3.2 Ω 320 aW
100 pA	* * *	* * *	* * *	* * *	* * *	* * *	6.32 MΩ ** 32 fW	2.0 MΩ ** 10 fW	632 kΩ 60 Ω 3.2 fW	200 kΩ 60 Ω 1.0 fW	63.2 kΩ 30 Ω 320 aW	20 kΩ 20 Ω 100 aW
31.6 pA	* * *	* * *	* * *	* * *	* * *	* * *	* * *	6.32 MΩ ** 3.2 fW	2.0 MΩ ** 1.0 fW	632 kΩ 200 Ω 320 aW	200 kΩ 200 Ω 100 aW	63.2 kΩ 60 Ω 32 aW
10 pA	* * *	* * *	* * *	* * *	* * *	* * *	* * *	* * *	6.32 MΩ ** 320 aW	2.0 MΩ ** 100 aW	632 kΩ 600 Ω 32 aW	200 kΩ 600 Ω 10 aW
3.16 pA	* * *	* * *	* * *	* * *	* * *	* * *	* * *	* * *	* * *	6.32 MΩ ** 32 aW	2.0 MΩ ** 10 aW	632 kΩ ** 3.2 aW
1.0 pA	* * *	* * *	* * *	* * *	* * *	* * *	* * *	* * *	* * *	* * *	* * *	* * *

Accuracy: ±0.5%

Table 1-3. Model 370/3708 Voltage Range

Accuracy: ±0.03% ±0.05% ±0.1% ±0.3%

	6.32 mV	2.0 mV	632 µV	200 µV	63.2 µV	20 µV	6.32 µV	2.0 µV
31.6 mA	200 mΩ 200 nΩ 100 µW	63.2 mΩ 63 nΩ 32 µW	20 mΩ 40 nΩ 10 µW	6.32 mΩ 13 nΩ 3.2 µW	2.0 mΩ 10 nΩ 1.0 µW	632 µΩ 10 nΩ 320 nW	200 µΩ 10 nΩ 100 nW	63.2 µΩ 10 nΩ 32 nW
10 mA	632 mΩ 630 nΩ 32 µW	200 mΩ 200 nΩ 10 µW	63.2 mΩ 130 nΩ 3.2 µW	20 mΩ 40 nΩ 1.0 µW	6.32 mΩ 32 nΩ 320 nW	2.0 mΩ 32 nΩ 100 nW	632 µΩ 32 nΩ 32 nW	200 µΩ 32 nΩ 10 nW
3.16 mA	2.0 Ω 2.0 µΩ 10 µW	632 mΩ 630 nΩ 3.2 µW	200 mΩ 400 nΩ 1.0 µW	63.2 mΩ 130 nΩ 320 nW	20 mΩ 100 nΩ 100 nW	6.32 mΩ 100 nΩ 32 nW	2.0 mΩ 100 nΩ 10 nW	632 µΩ 100 nΩ 3.2 nW
1.0 mA	6.32 Ω 6.3 µΩ 3.2 µW	2.0 Ω 2.0 µΩ 1.0 µW	632 mΩ 1.3 µΩ 320 nW	200 mΩ 400 nΩ 100 nW	63.2 mΩ 320 nΩ 32 nW	20 mΩ 320 nΩ 10 nW	6.32 mΩ 320 nΩ 3.2 nW	2.0 mΩ 320 nΩ 1.0 nW
316 µA	20 Ω 20 µΩ 1.0 µW	6.32 Ω 6.3 µΩ 320 nW	2.0 Ω 4.0 µΩ 100 nW	632 mΩ 1.3 µΩ 32 nW	200 mΩ 1.0 µΩ 10 nW	63.2 mΩ 1.0 µΩ 3.2 nW	20 mΩ 1.0 µΩ 1.0 nW	6.32 mΩ 1.0 µΩ 320 pW
100 µA	63.2 Ω 63 µΩ 320 nW	20 Ω 20 µΩ 100 nW	6.32 Ω 13 µΩ 32 nW	2.0 Ω 4.0 µΩ 10 nW	632 mΩ 3.2 µΩ 3.2 nW	200 mΩ 3.2 µΩ 1.0 nW	63.2 mΩ 3.2 mΩ 320 pW	20 mΩ 3.2 µΩ 100 pW
31.6 µA	200 Ω 200 µΩ 100 nW	63.2 Ω 63 µΩ 32 nW	20 Ω 40 µΩ 10 nW	6.32 Ω 13 µΩ 3.2 nW	2.0 Ω 10 µΩ 1.0 nW	632 mΩ 10 µΩ 320 pW	200 mΩ 10 µΩ 100 pW	63.2 mΩ 10 µΩ 32 pW
10 µA	632 kΩ 630 µΩ 32 nW	200 Ω 200 µΩ 10 nW	63.2 Ω 130 µΩ 3.2 nW	20 Ω 40 µΩ 1.0 nW	6.32 Ω 32 µΩ 320 pW	2.0 Ω 32 µΩ 100 pW	632 mΩ 32 µΩ 32 pW	200 mΩ 32 µΩ 10 pW
3.16 µA	2.0 kΩ 2.0 mΩ 10 nW	632 Ω 630 mΩ 3.2 nW	200 Ω 400 µΩ 1.0 nW	63.2 Ω 130 µΩ 320 pW	20 Ω 100 µΩ 100 pW	6.32 Ω 100 µΩ 32 pW	2.0 Ω 100 µΩ 10 pW	632 mΩ 100 µΩ 3.2 pW
1.0 µA	6.32 kΩ 6.3 mΩ 3.2 nW	2.0 kΩ 2.0 mΩ 1.0 nW	632 Ω 1.3 mΩ 320 pW	200 Ω 400 µΩ 100 pW	63.2 Ω 320 µΩ 32 pW	20 Ω 320 µΩ 10 pW	6.32 Ω 320 µΩ 3.2 pW	2.0 Ω 320 µΩ 1.0 pW
316 nA	20 kΩ 20 mΩ 1.0 nW	6.32 kΩ 6.3 mΩ 320 pW	2.0 kΩ 4.0 mΩ 100 pW	632 Ω 1.3 mΩ 32 pW	200 Ω 1.0 mΩ 10 pW	63.2 Ω 1.0 mΩ 3.2 pW	20 Ω 1.0 mΩ 1.0 pW	6.32 Ω 1.0 mΩ 320 fW
100 nA	63.2 kΩ 63 mΩ 320 pW	20 kΩ 40 mΩ 100 pW	6.32 kΩ 13 mΩ 32 pW	2.0 kΩ 6.0 mΩ 10 pW	632 Ω 3.2 mΩ 3.2 pW	200 Ω 3.2 mΩ 1.0 pW	63.2 Ω 3.2 mΩ 320 fW	20 Ω 3.2 mΩ 100 fW
31.6 nA	200 kΩ 400 mΩ 100 pW	63.2 kΩ 130 mΩ 32 pW	20 kΩ 60 mμ 10 pW	6.32 kΩ 20 mΩ 3.2 pW	2.0 kΩ 20 mΩ 1.0 pW	632 Ω 10 mΩ 320 fW	200 Ω 10 mΩ 100 fW	63.2 Ω 10 mΩ 32 fW
10 nA	632 kΩ 1.9 Ω 32 pW	200 kΩ 600 mΩ 10 pW	63.2 kΩ 200 mΩ 3.2 pW	20 kΩ 200 mΩ 1.0 pW	6.32 kΩ 63 mΩ 320 fW	2.0 kΩ 63 mΩ 100 fW	632 Ω 32 Ω 32 fW	200 Ω 32 mΩ 10 fW
3.16 nA	2.0 MΩ 6.0 Ω 10 pW	632 kΩ 2.0 Ω 3.2 pW	200 kΩ 2.0 Ω 1.0 pW	63.2 kΩ 630 mΩ 320 fW	20 kΩ 600 mΩ 100 fW	6.32 kΩ 200 mΩ 32 fW	2.0 kΩ 200 mΩ 10 fW	632 Ω 100 mΩ 3.2 fW
1.0 nA	6.32 MΩ ** 3.2 pW	2.0 MΩ 20 Ω 1.0 pW	632 kΩ 6.3 Ω 320 fW*	200 kΩ 6.0 Ω 100 fW	63.2 kΩ 3.2 Ω 32 fW	20 kΩ 2.0 Ω 10 fW	6.32 kΩ 630 mΩ 3.2 fW	2.0 kΩ 1.0 Ω 1.0 fW
316 pA	* * *	6.32 MΩ ** 320 fW	2.0 MΩ 60 Ω 100 fW	632 kΩ 19 Ω 32 fW	200 kΩ 20 Ω 10 fW	63.2 kΩ 6.3 Ω 3.2 fW	20 kΩ 3.0 Ω 1.0 fW	6.32 kΩ 3.2 Ω 320 aW
100 pA	* * *	* * *	6.32 MΩ ** 32 fW	2.0 MΩ 200 Ω 10 fW	632 kΩ 63 Ω 3.2 fW	200 kΩ 60 Ω 1.0 fW	63.2 kΩ 32 Ω 320 aW	20 kΩ 20 Ω 100 aW
31.6 pA	* * *	* * *	* * *	6.32 MΩ ** 3.2 fW	2.0 MΩ 600 Ω 1.0 fW	632 kΩ 190 Ω 320 aW	200 kΩ 200 Ω 100 aW	63.2 kΩ 63 Ω 32 aW
10 pA	* * *	* * *	* * *	* * *	6.32 MΩ ** 320 aW	2.0 MΩ 2.0 kΩ 100 aW	632 kΩ 630 Ω 32 aW	200 kΩ 600 Ω 10 aW
3.16 pA	* * *	* * *	* * *	* * *	* * *	6.32 MΩ ** 32 aW	2.0 MΩ 6.0 kΩ 10 aW	632 kΩ 1.9 kΩ 3.2 aW

Accuracy: ±0.5%

±1.0%

1.2 SPECIFICATIONS

Measurement Type: AC, 4-lead differential, resistance
Number of Inputs: 1; 16 with Model 3716 Scanner
Measurement Units: Ohms, Kelvin (with temperature response curve)
Resistance Ranges: 2 mΩ to 2 MΩ (excitation dependent)
Reading Rate: 10 readings per second (same range and channel)
Range Change Settling: 3 s + filter settling
Channel Change (Scan) Settling: 3 s + filter settling
A/D Resolution: 24 bit
Measurement Resolution: Range dependent (See Table 1-1)
Accuracy: Range dependent (See Table 1-1)
Measurement Temp. Co: (±0.0015% of reading ±0.0002% of range)/°C
Lead Connections: V+, V–, I+, I–, V shield, I shield, individual guards
Scanner Lead Connections: V+, V–, I+, I– for each sensor, shield common to all
Max Lead Resistance: 100 Ω + 10% of resistance range per lead for current ≤3.16 mA, 10 Ω + 10% of resistance range per lead for current ≥10 mA
Input Isolation: Measurement optically isolated from chassis ground
Common Mode Reduction: Matched impedance voltage input and current output, active CMR
Excitation Type: Sinusoidal AC current source
Excitation Frequency: 13.7 Hz (9.8 Hz and 16.2 Hz alternates)
Excitation Currents: 21 ranges from 3.16 pA to 31.6 mA RMS
Minimum Excitation Power: 10^{-18} W into 100 kΩ (see Table 1-1 for other ranges)
Maximum DC Current: 4 pA + 1% of excitation current (1.6×10^{-18} W into 100 kΩ)
Current Protection: Current leads relay shorted on power-up and range change

Voltage Ranges: 12 ranges from 2 μV to 632 mV RMS
Voltage Over Range: 20% nominal
Input Impedance: Approaches 5×10^{12} Ω

Range Selection Modes: Manual, Voltage Excitation, Current Excitation, and Autorange
Scanner Modes: Manual or Autoscan
Filter: Settling Times 1 to 200 seconds
Additional Software Features: Max/Min capture, Linear equation, user-programmable pause on range and input change

Temperature Conversion

Supported Sensors: Any resistive sensor including NTC resistors (e.g., Germanium, Carbon-Glass, Cernox™, Ruthenium Oxide [Rox™]) and PTC resistors (e.g., Rhodium-Iron RTD)
Requirements: Requires calibrated sensor and a temperature response curve loaded into the instrument at the factory or by the user
Temperature Coefficient: Negative or Positive
Temperature Units: Kelvin
Low Temperature: Below 20 mK in a well-designed system
Temperature Resolution: Sensor and temperature dependent (Refer to Paragraph 1.2)
Curve Memory: Space for twenty 200-point curves
Curve Entry: Entered via front panel, computer interface, or CalCurve™ option
Curve Format: Ohm/K, Log Ohm/K

Temperature Control

Control Type: High resolution digital PID
Control Modes: Closed Loop PID, Open Loop
Tuning Modes: Manual PID, Zones
Setpoint Units: Ohms or Kelvin (with temperature calibration curve)
Setpoint Resolution: Same as reading display resolution
Control Stability: Below 10 mK p-p at 50 mK, system dependent
Heater Output Type: Variable DC current source
Heater Output Isolation: Optically isolated from chassis and measurement ground
Output D/A Resolution: 18 bit
Heater Output Ranges: 100 mA, 31.6 mA, 10 mA, 3.16 mA, 1 mA, 316 μA, 100 μA , 31.6 μA
Heater Output Compliance: 10 V
Max Power of Output Ranges: 1 W, 100 mW, 10 mW, 1 mW, 100 μW, 10 μW, 1 μW, 0.1 μW (nominal 100 Ω)
Heater Type: Resistive
Heater Resistance Range: 1 – 100 kΩ, 100 Ω for maximum power
Heater Output Gain Accuracy: ±1% of setting
Heater Output Offset (at 0%): ±0.02% of range
Max Heater Noise Current: <0.005% of range
PID Control Parameters:
Proportional: 0.001 – 1000
Integral: 0 – 10,000 seconds
Derivative: 0 – 10,000 seconds
Manual Output: 0 – 100% (resolution 0.001%)
PID Zone Settings: 10 zones that include setpoint, heater range, PID, relays, and analog outputs (still)
Still Output: Up to 1 W of power available using analog output #2
Heater Protection: Short circuit-protected, disabled with a relay on power-up, defaults to off range on power-up, selectable heater range limit, open circuit detection
Scanner Support: Control with scanned input is supported with reduced stability

Front Panel

Display Type: Graphic (8 line by 40 character) vacuum fluorescent display
Number of Reading Displays: 1 to 8
Reading Display Units: mΩ, Ω, kΩ, MΩ, mK, K
Display Resolution: 4, 5, or 6 digit, user selected
Display Update Rate: 2 readings per second
Reading Display Options: Ohms, Kelvin, Max, Min, Linear
Other Displays: Channel number, units, resistance range, excitation voltage or current, excitation power, control setpoint, heater range, and heater output
Display Annunciators: Reading errors, CMR, Alarm, Ramp, Zone, Remote
LED Annunciators: Autorange, Excitation Mode, Autoscan
Keypad: 36 key, numeric and specific functions

Interface

IEEE-488.2 Interface Capability: SH1, AH1, T5, L4, SR1, RL1, PP0, DC1, DT0, C0, E1
Software Support: LabView driver for IEEE-488 interface (consult factory for availability)

Specifications (Continued)

Interface (Continued)
Serial Interface Capability: RS-232C, DE-9 Connector, 9600 BAUD
Alarms:
- Number: Up to 32, high and low for each channel
- Settings: Source, High Setpoint, Low Setpoint, Deadband, Latching/Non-latching, Audible On/Off
- Actuators: Display annunciator, beeper, relays

Relays:
- Number: 2
- Contacts: Normally Open, Normally Closed, and Common
- Contact Rating: 30 VDC at 5A
- Operation: Relays may be activated on high and low alarm setpoints or manually
- Connector: Detachable terminal block

Analog Voltage Outputs:
- Number: 2
- Type: Variable DC voltage source
  - Scale: User specified
  - Range: ±10 V
  - Resolution: 0.3 mV, 0.003% of full scale
  - Accuracy: ±2.5 mV
- Maximum Current: 100 mA
- Maximum Power: 1 W
- Minimum Load Resistance: 100 Ω (short circuit- protected)
- Ground Reference: Chassis
- Operation: Tracks reading, error (DR) using linear equation, or use as still heater
- Connector: BNC

Monitor Output:
- Operation: User selects one of several analog voltage diagnostic points (must remain isolated)
- Connector: BNC

Frequency Reference:
- Signal Type: Phase sensitive detector reference (must remain isolated)
- Amplitude: 0 to +5 V nominal
- Waveform: Square wave
- Connector: BNC

General
Ambient Temperature: 15 – 35 °C at rated accuracy, 5 – 40 °C at reduced accuracy
Calibration Schedule: 1 year
Power Requirement: 100, 120, 220, 240 VAC, +6% –10%, 50 or 60 Hz, 50 VA
Size: 435 mm W × 90 mm H × 317 mm D, full rack
Weight: Model 370 (5.9 kg, 12.9 lbs), Model 3716 (1 kg, 2.1 lbs)
Approval: CE mark (consult factory for availability)

3716/L and 3708 Scanners
Size: 135 mm W x 66 mm H x 157 mm D (5.2 in x 2.6 in x 6.2 in)
Weight: (1 kg (2.1 lb)

Ordering Information
Model:
370S – AC resistance bridge with 3716 scanner
370L – AC resistance bridge with 3716L scanner
370U – AC resistance bridge with 3708 scanner
370N – AC resistance bridge only
3716 – 16 channel scanner for Model 370
3716L – Low resistance 16-channel scanner for Model 370
3708 – Ultra-low resistance 8-channel preamp/scanner for Model 370
3708-ARW – Ultra-low resistance 8-channel preamp/scanner for Model 370, includes 370 upgrade for instruments with main version 9/27/2005 and input version 1.3 or earlier firmware

*Select a power configuration**
VAC-100 – Instrument configured for 100 VAC with U.S. power cord
VAC-120 – Instrument configured for 120 VAC with U.S. power cord
VAC-220 – Instrument configured for 220 VAC with universal Euro line cord
VAC-240 – Instrument configured for 240 VAC with universal Euro line cord
VAC-120-ALL – Instrument configured for 120 VAC with U.S. power cord and universal Euro line cord and fuses for 220/240 Setting (extra charge for this option)
**Other country line cords available, consult Lake Shore*

Accessories included with the Model 370
G-106-233 – Sensor input mating connector (6-pin DIN plug); 2 included
106-737 – Terminal block mating connector
--- Calibration certificate
MAN-370 – Model 370 user's manual

Accessories included with the preamps/scanners
G-106-253 – DB-25 plug;4 included
G-106-264 – DB-25 hood; 4 included
107-379 – Mounting bracket
112-374 – 3 m (10 ft) cable from scanner to Model 370

Options and Accessories
4005 – 1 m (3.3 ft) IEEE-488 (GPIB) computer interface cable assembly; includes extender required for simultaneous use of IEEE cable and relay terminal block
8000 – CalCurve™, CD-ROM—calibrated sensor breakpoint table on a CD-ROM for customer upload
8001-370 – CalCurve™, factory installed—calibrated sensor breakpoint table factory-installed into nonvolatile memory
8000-05-370 – CalCurve™, field installed—calibrated sensor breakpoint table loaded into nonvolatile memory for customer installation
CAL-370-CERT – Instrument recalibration with certificate
CAL-370-DATA – Instrument recalibration with certificate and data
RM-1 – Kit for mounting one Model 370 in a 482.6 mm (19 in) rack mount cabinet

1.4 SAFETY SUMMARY

Observe these general safety precautions during all phases of instrument operation, service, and repair. Failure to comply with these precautions or with specific warnings elsewhere in this manual violates safety standards of design, manufacture, and intended instrument use. Lake Shore Cryotronics, Inc. assumes no liability for Customer failure to comply with these requirements.

The Model 370 protects the operator and surrounding area from electric shock or burn, mechanical hazards, excessive temperature, and spread of fire from the instrument. Environmental conditions outside of the conditions below may pose a hazard to the operator and surrounding area.

- Indoor use.
- Altitude to 2000 meters.
- Temperature for safe operation: 5 °C to 40 °C.
- Maximum relative humidity: 80% for temperature up to 31 °C decreasing linearly to 50% at 40 °C.
- Power supply voltage fluctuations not to exceed ±10% of the nominal voltage.
- Overvoltage category II.
- Pollution degree 2.

Ground the Instrument

To minimize shock hazard, the instrument is equipped with a 3-conductor AC power cable. Plug the power cable into an approved three-contact electrical outlet or use a three-contact adapter with the grounding wire (green) firmly connected to an electrical ground (safety ground) at the power outlet. The power jack and mating plug of the power cable meet Underwriters Laboratories (UL) and International Electrotechnical Commission (IEC) safety standards.

Ventilation

The instrument has ventilation holes in its side covers. Do not block these holes when the instrument is operating.

Do Not Operate In An Explosive Atmosphere

Do not operate the instrument in the presence of flammable gases or fumes. Operation of any electrical instrument in such an environment constitutes a definite safety hazard.

Keep Away From Live Circuits

Operating personnel must not remove instrument covers. Refer component replacement and internal adjustments to qualified maintenance personnel. Do not replace components with power cable connected. To avoid injuries, always disconnect power and discharge circuits before touching them.

Do Not Substitute Parts Or Modify Instrument

Do not install substitute parts or perform any unauthorized modification to the instrument. Return the instrument to an authorized Lake Shore Cryotronics representative for service and repair to ensure that safety features are maintained.

Cleaning

Do not submerge instrument. Clean only with a damp cloth and mild detergent. Exterior only.

1.5 SAFETY SYMBOLS

- Direct current (power line).
- Alternating current (power line).
- Alternating or direct current (power line).
- Three-phase alternating current (power line).
- Earth (ground) terminal.
- Protective conductor terminal.
- Frame or chassis terminal.
- On (supply).
- Off (supply).
- Equipment protected throughout by double insulation or reinforced insulation (equivalent to Class II of IEC 536 - see Annex H).
- Caution: High voltages; danger of electric shock. Background color: Yellow; Symbol and outline: Black.
- Caution or Warning - See instrument documentation. Background color: Yellow; Symbol and outline: Black.
- Fuse.

This Page Intentionally Left Blank

CHAPTER 2

BACKGROUND

2.0 GENERAL

This chapter provides background information related to the Model 370 AC Resistance Bridge and bridge measurements in general. It is intended to give the user insight into the benefits and limitations of the instrument and help apply the features of the Model 370 to a variety of experimental challenges. For information on how to install the Model 370 please refer to Chapter 3. Instrument operation information is contained in Chapter 4.

2.1 USEFUL TEMPERATURE RANGE

The Model 370 is not an ordinary ohmmeter. As described throughout this manual, every effort has been made to measure resistance with as little power as possible entering the resistor. The need for such careful attention is most evident at low temperatures, particularly below 1 K. The instrument is not limited to those applications and is useful in applications above 1 K when excitation power is critical. When excitation power is not critical, however, alternatives may be available that provide faster readings or lower cost.

The lowest temperature at which the Model 370 can make useful resistance measurements is difficult to define. In a practical sense, the instrument is limited by its need for four electrically conductive leads to be attached to a resistor and that resistor attached to a cold surface. Heat conduction and noise pick-up in the resistor leads limit the lowest temperature that can be achieved in this environment, even before an instrument is attached. The diminishing thermal contact between the resistor and cold surface at lower and lower temperatures only exaggerate the problem. In general, resistance bridge measurements are considered routine down to 100 mK in a capable cryogenic cooling system. With careful installation of a high quality bridge like the Model 370 it is not difficult to achieve 50 mK. Below that, each detail of the overall system has to be optimized to a low end of between 10 and 20 mK.

2.2 TEMPERATURE SCALES

Temperature conversions at such low temperatures can raise even more questions than resistance measurements. One reason is the delay in getting a recognized temperature standard for very low temperatures. As of the writing of this manual, the International Temperature Scale of 1990 (ITS-90) is the most current effort to define an internationally accepted temperature scale. It is based on primary thermometers and fixed temperature points. A detailed discussion of ITS-90, including interpolation instruments and equations, was published by the National Institute of Standards and Testing (NIST) as Technical Note 1265, "Guidelines for Realizing the International Temperature Scale of 1990 (ITS-90)" by B.W. Magnum and G.T. Furukawa.

Unfortunately for those working at lower temperature, ITS-90 is only defined down to 650 mK. In the absence of a recognized international standard, those knowledgeable in the field have created a working standard below 650 mK. Lake Shore has worked closely with NIST to create a means of interpolating between superconducting fixed points using a secondary standard germanium resistance thermometer (GRT). The process has been verified by other laboratories to match accepted working standards to within a few millikelvin down to a temperature of 48 mK. Lake Shore presently calibrates temperature sensors down to 50 mK using this method. We are looking forward to an extended low temperature standard in 2002.

2.3 CRYOGENIC COOLING SYSTEM TERMINOLOGY

There are many different cryogenic cooling systems used in laboratories today and it would be impossible to describe them all in this manual. This section briefly illustrates the three most common cooling systems capable of reaching temperatures below 1 K. This is an attempt to demonstrate how the Model 370 can be integrated into these systems for resistance measurement, temperature measurement and temperature control. It is hoped that from these examples, those knowledgeable in cryogenic techniques will become familiar with the terminology used throughout this manual and the intended operation of many of the instrument features.

2.3.1 Dilution Refrigerator Terminology

Dilution refrigerators remain the workhorse of low temperature research down to approximately 5 – 10 mK. So many variations of factory and home built units exist that it is unlikely that any two are identical. Figure 2-1 illustrates only the most basic features.

Helium Dewar: Vacuum insulated Dewar large enough to contain the following components. Sometimes includes a nitrogen outer jacket to improve efficiency or superconducting magnet coil when needed.

^{4}He Reservoir: Reservoir of liquid ^{4}He at atmospheric pressure that provides bulk cooling down to 4.2 K. Pre-cools gas entering the vacuum space and acts as a radiation shield for refrigeration components.

Vacuum Space: Insulates refrigeration components and provides a clear workspace.

1 K Pot (^{4}He Evaporator): Pumped reservoir of ^{4}He maintained at 1 K. Used in the process of condensing ^{3}He rich gas returning from pumping system. Also used as a heat sink for measurement leads. *Good location for a temperature sensor for cool down monitoring and troubleshooting*.

Still Heat Exchanger: Chamber used to evaporate ^{3}He out of a dilute ^{3}He mix (liquid ^{4}He containing some ^{3}He—sometimes called mash). It is the first stage below 1 K and is also used to liquefy returning ^{3}He. *The still requires a few milliwatts of heat from a resistive heater to sustain evaporation. The Still Output can drive the still heater. Good location for a diagnostic temperature sensor.*

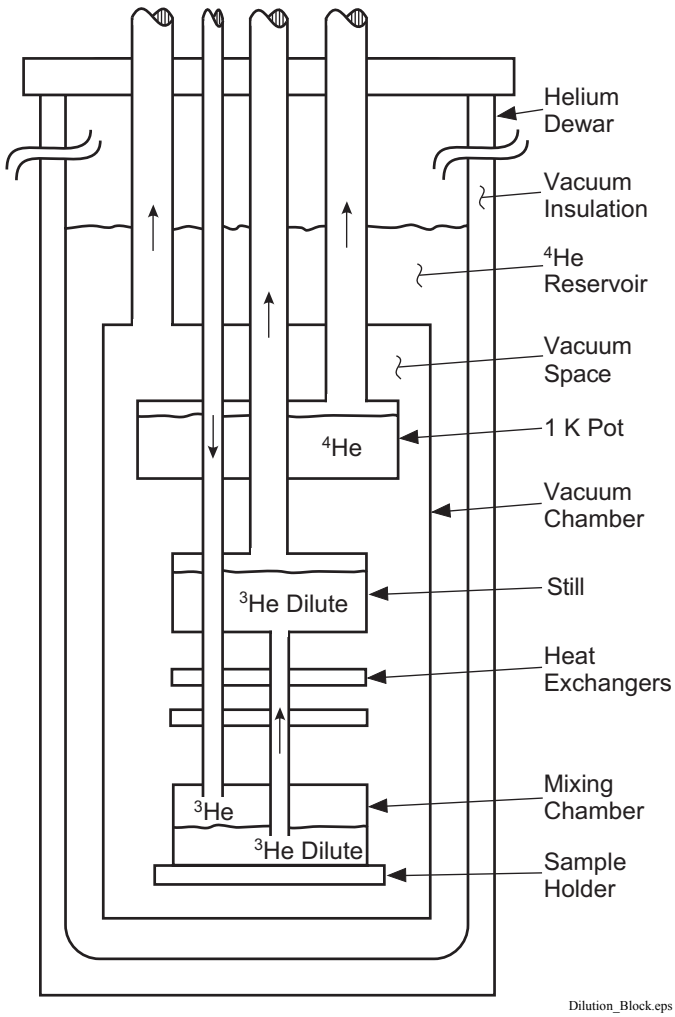

Figure 2-1. Dilution Refrigerator Block Diagram

Heat Exchangers: One or more heat exchangers serve to cool returning ^{3}He rich liquid to near the temperature of the mixing chamber. Also used to heat sink measurement leads.

Mixing Chamber: Chamber where cooling action takes place. Holds both ^{3}He rich liquid and dilute ^{3}He separated by a phase boundary. When ^{3}He is depleted from the mix by the still, more crosses the phase boundary to maintain equilibrium. In doing so it is expanded into (diluted by) the ^{4}He creating cooling of the chamber. *Best location for temperature control sensor and resistive heater. The heater output can control temperature by driving the heater under closed loop PID control or open loop control.*

Load (Sample Holder): End of the mixing chamber where experiments can take place. May either be part of or attached to the mixing chamber and it is often designed for a unique purpose. *Requires a separate temperature sensor if its temperature is different from the mixing chamber*.

2.3.2 ^{3}He Cryostat

^{3}He Cryostats are the least complex systems capable of reaching temperatures down to 300 mK. Even at such relatively warm temperatures the benefits of a well designed resistance bridge must be considered when selecting instrumentation. Figure 2-2 illustrates the basic features.

Helium Dewar: Vacuum insulated Dewar large enough to contain the following components. Sometimes includes a nitrogen outer jacket to improve efficiency.

^{4}He Reservoir: Reservoir of liquid ^{4}He at atmospheric pressure that provides bulk cooling down to 4.2 K. Pre-cools gasses entering the vacuum space and acts as a radiation shield for refrigeration components.

Vacuum Space: Insulates refrigeration components and provides a clear workspace.

1 K Pot (^{4}He Evaporator): Pumped reservoir of ^{4}He maintained at 1 K. Used in the process of condensing ^{3}He gas returning from pumping system. Also used as a heat sink for measurement leads. *Good location for a temperature sensor for cool down monitoring and troubleshooting*.

Heat Exchangers: One or more heat exchangers serve to cool returning ^{3}He liquid to near the temperature of the ^{3}He evaporator. Also used to heat sink measurement leads.

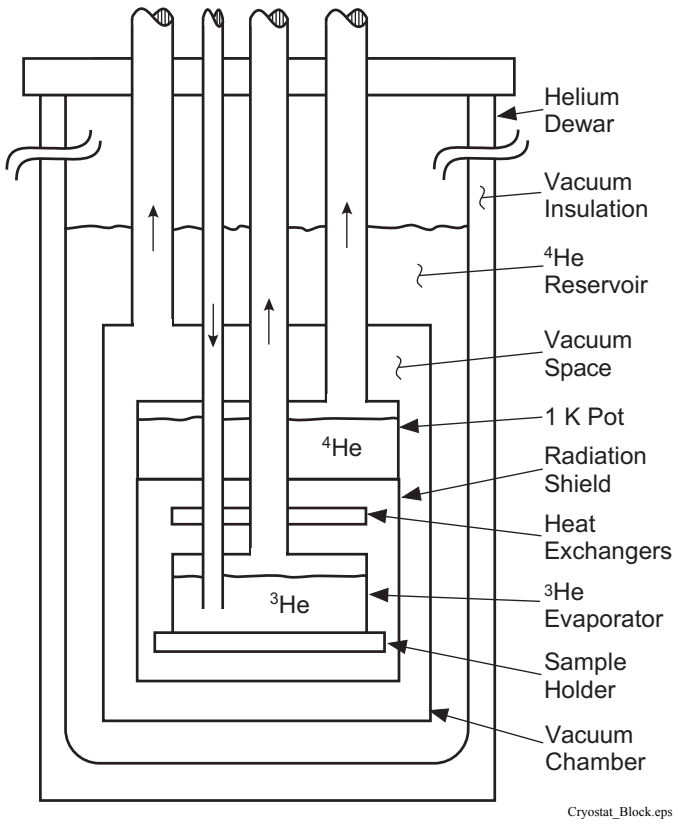

Figure 2-2. ^{3}HE Cryostat Block Diagram

^{3}He Evaporator: Chamber where cooling action takes place. Liquid ^{3}He is pumped under vacuum to reduce its boiling point to approximately 300 mK. *Best location for temperature control sensor and resistive heater. The heater output can control temperature by driving the heater under closed loop PID control or open loop control.*

Load (Sample Holder): End of the ^{3}He evaporator where experiments can take place. May either be part of or attached to the evaporator and is often designed for a unique purpose. *Requires a separate temperature sensor if its temperature is different from the ^{3}He evaporator.*

2.3.3 Adiabatic Demagnetization Refrigerator (ADR)

The principals of ADR have been known for some time and many very capable systems have been built over the years. There has recently been growing interest in the technology and it is finding its way into many new applications. The Model 370 has many features that can help automate and control these systems in temperature ranges where leaded resistance measurement is practical. Figure 2-3 illustrates a typical first stage of an ADR but other stages can be added.

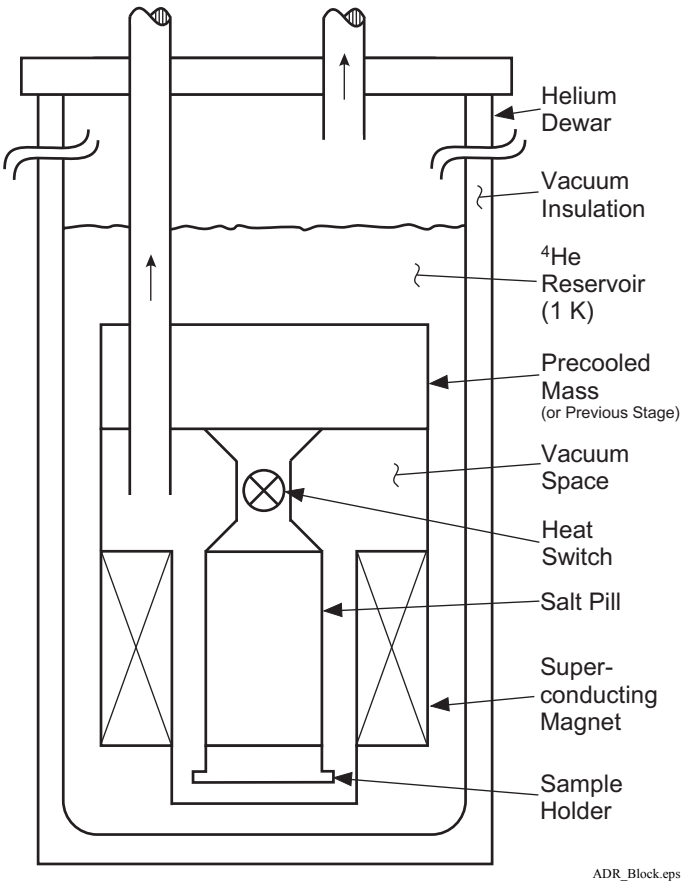

Figure 2-3. Single-Stage ADR Block Diagram

Helium Dewar: Vacuum insulated Dewar large enough to contain the following components. Sometimes includes a nitrogen outer jacket to improve efficiency. Contains superconducting magnet if the first magnetic cooling stage has a large mass.

^{4}He Reservoir: Reservoir of liquid ^{4}He at atmospheric pressure that provides bulk cooling down to 4.2 K. Pre-cools leads entering the vacuum space and acts as a radiation shield for refrigeration components.

Vacuum Space: Insulates refrigeration components and provides a clear workspace.

Pre-Cooling Stage: Brings the system to a low enough temperature for magnetic cooling to become practical. Also acts as a heat sink for the first magnetic cooling stage. This can be a cryogenic refrigerator, ^{4}He bath, pumped ^{4}He cryostat or pumped ^{3}He cryostat. *Good location for a temperature sensor for cool down monitoring and troubleshooting*.

Heat Switch: Allows thermal contact between the pre-cooling stage and salt pill during magnetization then provides thermal isolation during demagnetization (cooling). The construction of the switch varies depending on temperature but could be superconducting, exchange gas (gas-gap) or mechanical. *Several types of heat switches can be controlled by the still heater or analog output.*

Superconducting Magnet: Magnetizes the salt pill while in thermal contact with the pre-cooling stage then demagnetizes it when thermally isolated. *The magnet power supply can be programmed by the analog output and controlled via computer interface.*

Salt Pill: Mass of paramagnetic salt that acts as the refrigerant. It is magnetized while in thermal contact with the pre-cooling stage so the heat of magnetization is removed and entropy is reduced. Then it is demagnetized while thermally isolated and as field is decreased the salt must decrease in temperature to maintain constant entropy. *Best location for temperature control sensor. The heater output can control temperature by trimming current in the magnet with its heater output current source. Resistive heating is not desirable.*

Load (Sample Holder): End of the final cooling stage where experiments can take place. *Requires a separate temperature sensor if its temperature is different from the final stage.*

2.4 MODEL 370 THEORY OF OPERATION

2.4.1 Why is the Model 370 called a Bridge?

Historically precision resistance measurements were made using one of several bridge configurations that are a combination of known reference resistors and the unknown being measured. Normally in a bridge one of the known resistors is trimmed until a null appears at the measurement point of the circuit and at that time the unknown resistance can be calculated. The technique is preferred because it relies only on resistance ratios and a null measurement, which eliminates many of the errors normally associated with amplifiers, voltage references and current sources. As electronic circuits improve fewer and fewer applications required the complexity of a bridge measurement.

Some applications benefit so much from the bridge configuration that they may never be replaced. One example is strain gauge measurements that integrate both measurement and temperature compensation into the bridge. Another application, often seen in physics laboratories, is low-noise resistance measurement where the reference resistors and unknown are all cooled to reduce thermal noise.

The Model 370 does not use a bridge configuration for resistance measurement. Its measurement technique is described in the next paragraph. Side-by-side testing demonstrated that the precision circuits in the Model 370 would not benefit from a bridge configuration unless the reference resistors were cooled. This path was not chosen because installation is more complicated than most applications require. The name "Bridge" was retained to reflect the instrument's heritage of precision resistance measurements.

2.4.2 Resistance Measurement

The Model 370 uses a four lead, AC measurement technique to achieve the best possible accuracy with the lowest possible excitation. Similar circuits are used extensively in small signal measurement because they are flexible and can extract small signal from relatively noisy environments.

The Model 370 uses current excitation because controlled current is very stable and predictable. Current can also be scaled easily, which is necessary to achieve low excitation. The Model 370 has 21 current settings down to 3.16 pA. These currents have low noise and almost no DC component to self heat the measured resistor. Two excitation modes are available to best utilize the features of the current source in different applications. One lower current setting, 1 pA, is available but not specified because leakage and bias currents in the measurement circuits can be a large percentage of the excitation current. The 1 pA current setting should be used for relative measurements only.

Precision resistance measurements use a four lead method to eliminate the effect of nominal lead resistance. Excitation current is driven on one pair of leads while the resulting signal voltage is measured on the second pair. Measurement errors from lead resistance are proportional to current flowing in the voltage leads. Instrument voltage inputs are expected to have high impedance to prevent the unwanted current from flowing. The Model 370 has very high input impedance to both normal mode voltages (created by current source excitation) and common mode voltages (created by induced noise on the leads).

Offset voltages occur in every electronic circuit both in signal amplifiers and in lead wire connections that create thermal EMF voltages. Offset voltages affect accuracy more when the excitation is small because they are a larger percentage of the measured voltage. AC measurements allow AC filters that greatly reduce amplifier offsets at each stage, allowing higher amplifier gain and greater sensitivity than DC techniques. The AC technique is also naturally bipolar allowing any remaining thermal EMF or offset voltages to be averaged out of the resistance measurement. A relatively low frequency of excitation, 13.7 Hz, was chosen to reduce the effects of lead capacitance on the measurement. In a typical cryostat lead heat sink requirements and limited space make it difficult to reduce capacitance enough to operate at significantly higher frequency.

Environmental noise can limit the resolution of low excitation measurement. Well designed filtering is necessary to reclaim the desired signal from the noise. The Model 370 takes advantage of the AC filtering technique called phase sensitive detection that is used in Lock-In Amplifiers. This technique has no DC equivalent. Even with phase sensitive detection it is still necessary to shield these leads from environmental noise. The Model 370 facilitates appropriate shielding techniques in addition to offering more active noise reduction circuits.

2.4.3 Excitation Modes

The Model 370 uses current source excitation for resistance measurements. Current excitation mode is the most fundamental measurement mode because operation is tied directly to hardware function. The instrument firmware is also able to simulate voltage excitation of the measured resistor to create a second operating mode. Some users prefer voltage excitation mode because it matches the operation of other bridges and permits convenient limiting of excitation power. Resistance range selection is different in these two modes as described below. Autorange is available for both modes.

Voltage Excitation Mode

The user specifies an input voltage range that is a "not to exceed" setting for the instrument. The instrument selects the appropriate current setting that keeps the voltage across the resistor as high as possible without exceeding the voltage range setting. Current is changed when the resistance range changes to maintain the voltage limit. This mode is preferred when measuring negative temperature coefficient materials common in cryogenic temperature sensors. With voltage limited, excitation power in the resistor reduces with lowering temperature ($P = V^2/R$) limiting the effect of self-heating.

Current Excitation Mode

The user specifies a fixed excitation current. The instrument selects the appropriate voltage gain for the selected resistance range. The instrument changes gain when the resistance range changes. In this mode it is easier to calculate the actual power in the measured resistor ($P = I^2 \times R$) because the true current is displayed. In voltage excitation mode the voltage range displayed is the maximum not the actual voltage.

2.4.4 Resistance Ranges

The Model 370 has full-scale resistance ranges from 2 mΩ to 2 MΩ. Many ranges are available with several different excitation levels making resistance range selection is somewhat more involved than it initially appears. The goal is to use enough excitation to maintain reasonable accuracy, resolution and settling time without putting too much heat into the resistor. Higher resistance ranges from 6.32 MΩ to 63.2 MΩ, are available but not specified because the effects of lead capacitance can not be eliminated at such high resistances. These ranges should be used for relative measurements only.

The selected resistance range and excitation are always shown on the instrument display. Refer to Table 1-1 for resistance and excitation ranges. As shown in Table 1-1, not every combination of excitation and resistance range is possible. Unusable combinations of range and excitation are automatically locked out. The Model 370 also continuously calculates and displays the excitation power being dissipated in the resistor as additional feedback to the operator. The excitation current source is shorted inside the instrument to minimize transients during range changes.

Manual operation allows the user to choose both the excitation and resistance range. The instrument does not change ranges automatically. If the input resistance is too large for the range an overload condition will be indicated. This mode is used when the system is very sensitive to excitation changes or if changes in input resistance are too fast for the auto range algorithms.

The Model 370 has an autorange feature that will increase the resistance range any time the measured resistance is greater than full scale for the range and decrease the range any time the measured resistance is below 20% of full scale. The ranges have an approximate 20% over range capability so in most cases the instrument will increase range before an overload appears. Autorange works with either voltage or current excitation. It will not change the excitation setting in order to reach a resistance range that is not available for the present selection.

2.4.5 Measurement Circuit

The idea that small signal measurement instruments require special consideration during installation is expressed frequently in this manual. The following paragraphs illustrate how to treat the instrument and its environment as a "Measurement Circuit" and in general how to integrate instruments like the Model 370. The circuit analogy is appropriate because almost anything electrical or electronic in a laboratory has the potential to induce electric field (E-field) or magnetic field (H-field) noise on the measurement.

Since electrical noise is everywhere it is better to begin each installation with a good instrumentation strategy than try to deal with noise after measurements are compromised. Most parts of a good strategy are obvious, some are not and even the best plans do not work all the time. The Model 370 offers several features that help control noise and maintain signal integrity. The ideas and instrument features described in this manual often have to be tried in different combination to get the best results. Specific recommendations on installation and lead wiring are given in Chapter 3.

2.4.5.1 Shielding and Grounding Theory

Begin any installation by separating noise sources from their targets. Sources of E-field and H-field noise can be just about anything but the targets are most often signal leads and other wires and cables. H-field coupling can be dramatically reduced with an inch or less of separation. E-field noise requires more separation but is also more easily shielded. Noise can also travel easily on the power lines. If clean power lines are not available for instrumentation place line filters on noisy electrical or electronic devices. The line filter in the instrument can help but noise is always better reduced at its source.

The best defense against E-field noise is a conductive shield around the measurement. The more complete the shield the better. Ideally it should extend from the instrument measurement circuits through the cables and down to the measured resistor. This ideal approach is impractical in all but a few cryogenic systems. The practical approach is to connect the shield from the measurement circuits, through the room temperature cables, to the conductive Dewar or vacuum chamber. This creates a faraday shield around the entire measurement circuit.

The shield can only divert noise energy away from measurement leads if that energy has a place to go. Connecting the shield to measurement common (shield pin in the connector) is a good starting point but may not be the final answer. The measurement common is isolated from Earth ground and has, by design, a relatively low "mass". Most noise sources are referenced to Earth ground and, if they are large enough, can swing the entire measurement, shield and all. The shield may require a low impedance connection to Earth ground to effectively divert noise energy but connecting to Earth ground can cause new problems.

If the shield or any other part of the measurement circuit is connected to Earth ground it is necessary to prevent ground loops that couple line frequency noise into the measurement. A ground loop is created when measurement common is tied to Earth ground at more than one point. The isolation of the instrument breaks the loop between the instrument power cord and the measurement common. No loop is formed if measurement common is tied to Earth ground at only one point.

Loops are also the primary means of coupling H-field noise. Conductive shields do not reduce the effects of H-fields. Two ways to minimize H-field coupling are to reduce the loop area or break the loop (as described with ground loops). Loop area can be minimized by tightly twisting lead pairs, both voltage and current, within the shielded cables. This not only reduces loop area but also guarantees that both leads are exposed to the same common mode effects which are rejected by the measurement input.

2.4.5.2 Shields

Shields provide a low impedance path to measurement common to block E-field noise from getting to the signal leads. Shield pins are provided in the input connectors as attachment points for the shield conductors in lead cables. Shielding individual leads inside a cryostat is difficult because of limited space and the potential for heat leak. Cable shields are usually connected to the experimental Dewar to create a faraday shield around the measurement.

2.4.5.3 Electrical Isolation

The precision analog front end is electrically isolated from digital circuitry and chassis of the instrument by optocouplers. This can improve measurements in two ways. First, isolation makes it more difficult for digital noise from control circuits and computer interfaces to affect the measurement leads. Second, isolation breaks ground loops. It is often desirable to extend shielding from the measurement leads to the experimental Dewar. If the instrument shield and the Dewar both have low impedance to Earth ground a ground loop will be created. Isolation separates the instrument measurement from Earth ground to break the loop.

2.4.5.4 Driven Guards

For installations where lead length is greater than 10 feet or measured resistance is greater than 100 kΩ, four separate driven guards are provided. The driven guards follow the voltage on each lead to maintain the lowest possible voltage difference between the lead and its environment. This technique reduces the effect of cable capacitance. Without the guards, cable capacitance and measured resistance act together as a low-pass filter and can attenuate the desired measurement signal. Guards are not necessary when measured resistance is low or cable capacitance is low. The guards on the Model 370 can be turned on or off by the user as required by the application. Cables between the instrument and cryostat can be guarded even if it is impractical to continue guarding inside the cryostat. Driven guards are not available for scanned inputs but they are recommended for cables that run between the Model 370 and optional scanners.

2.4.5.5 Active Common Mode Reduction

It is common for precision measurement equipment to use a differential input as the first stage of signal conditioning. The differential input offers high impedance on both input voltage terminals to reduce the effect of common mode voltage (voltage that acts on both leads at the same time). Common mode voltage can come from many sources including external noise coupling into the lead wires and the instrument's own current source. To reduce the effect of common mode voltage further the Model 370 includes an active common mode reduction circuit. This circuit dynamically adjusts the operation point of the current source output to minimize the common mode voltage seen at the measurement input. Active common mode reduction allows the system to operate in environments that would otherwise saturate the instrument's differential input amplifiers. The effect of active common mode reduction is most evident when excitation current is 1 μA or greater but it should be left on most of the time. Active common mode reduction should be turned off any time a measurement lead is tied to measurement common (shield). The reduction circuit will not operate properly in this configuration because the symmetry of the measurement is lost. Measurements can be made with one lead grounded if the active common mode reduction feature is turned off.

2.4.5.6 Matched Impedance Current Source

The Model 370 takes the idea of a differential input one step further with a unique feature in its current source. The two current source output terminals have the same source impedance, similar to the voltage input terminals of a differential input that have the same input impedance. The resistor being measured and all noise sources in the environment "see" the same impedance on both current source leads when looking back into the instrument. The circuit improves the measurement in two ways. First, the differential input remains truly differential and performs well measuring any value of resistor. Traditional current sources with different impedance on each lead (one lead grounded) can lessen the common mode rejection of a differential input especially when measuring large resistors. Second, common mode noise sources have the same effect on both sides of the resistor being measured ensuring that common mode voltages are not turned into normal mode voltages (voltages are present between measurement leads). Common mode voltage is rejected by the differential input but normal mode error voltage is measured along with the desired signal.

2.4.6 Measurement Speed and Filtering

The Model 370 has built in hardware low-pass filter with a time constant of 200 milliseconds. That filter is necessary to convert the changing output of the phase sensitive detector, operating at 13.7 Hz, to a stable DC signal. The minimum filtering is sufficient to measure small resistance values with large excitation but that is not the true purpose of the AC Bridge. As resistance increases and excitation decreases additional filtering and longer time constants are necessary to maintain good resolution.

Additional filtering is done in the instrument firmware as a linear average. Linear averaging requires more memory than exponential filter algorithms but it gives the best possible settling time. Exponential filters implemented in firmware can take several times as long to settle for the same number of filter points. Unfortunately linear filters do not have a well behaved frequency response. The frequency response of a linear filter has the shape of a damped sine wave rather than the sloped rolloff of a first order low pass. This can create problems when trying to filter periodic noise that has a frequency lower than the excitation frequency.

The input hardware settles about 1 second after a large resistance change if no range change is required. When the firmware filter is turned on, that filter settling time must be added to the hardware settling time to approximate overall settling. Firmware filter settling time settings are available 1 second to 200 seconds. Please remember that filtering does not reduce the electrical noise that reaches the resistor and therefore will not reduce self-heating from noise.

Range change requires additional settling because the internal circuits need time to reestablish their operating point. The hardware settles in 2 to 3 seconds after range change. Settling may take a little longer especially if resistance is very large or excitation is very low. A change pause can be programmed into the instrument to allow for settling without disturbing other instrument firmware features. During the pause period features including filter, max/min capture, analog voltage output calculations and temperature control and error testing are suspended. The pause time can be set from 3 to 60 seconds and must be added to the filter settling time to approximate overall settling after range change. Scan channel change is similar to range change except the new channel may autorange after a channel change creating a further delay.

The instruments A/D sampling (update) rate is 10 readings per second and all readings are available over computer interface with an efficiently written program. This rate allows the A/D to capture any resistance changes that are able to pass through the input hardware. The temperature control loop, analog voltage outputs and max/min capture are updated with each A/D reading. The display is updated at 2 readings per second.

2.5 NOISE SOURCES

The effect of electrical noise is usually small and can be ignored when making routine measurements but all noise matters when signals fall to the microvolt level. The following paragraphs describe the most common noise source encountered with small signal measurements and some techniques that can help reduce their effect. More specific installation instructions are given n Chapter 3. The Model 370 offers a monitor voltage output that can be helpful in diagnosing noise related problems. The instrument will also display a message if noise overloads the measurement electronics. Refer to Chapter 7 for more information on diagnosing noise problems.

2.5.1 Induced Electrical Noise

Noise from the environment is typically classified as either electric field (E-field) or magnetic field (H-field). E-field noise capacitively couples into measurement leads or the resistor being measured. Voltage is induced on the leads as if the noise source and lead are two halves of a capacitor. The amount of coupling is related to the voltage change at the source, the common area between source and receiver (length of lead) and dielectric between them (distance in air). A cable shield is the first line of defense against E-field noise. No measurement cable of any length should be run from the Model 370 without a shield. The shield provides a low impedance path to measurement common that prevents the voltage change at the source from being seen at the measurement leads.

H-field noise inductively couples into measurement leads or other conductive loop. Current is induced in the lead as if the noise source and lead are two halves of a transformer. The amount of coupling is related to the field change from the source and the loop area. Tightly twisted leads inside the shielded cable reduce the total loop area and minimize the effect of H-field noise. It is also effective to move the instrument and leads away from noise sources because field strength reduces by the inverse cube of distance.

Even with proper installation it is difficult to reduce induced noise below 1 to 10 μV. High resistance ranges are affected more because the leads create a more efficient antenna when they are terminated at a high resistance.

2.5.2 Ground Loop Noise

Ground loops produce noise that acts similar to induced noise but the cause of the noise is different. Current is generated in any conductive circuit or loop when that loop contains changing current or magnetic field. In measurements this problem is commonly referred to as a ground loop and generally results when improperly grounded instruments are exposed to AC line current. Isolation reduces ground loop noise by breaking the loop or circuit. The Model 370 has a well designed power supply and uses optical isolation between the instrument chassis and measurement circuits. Careful installation is necessary to take advantage of the isolation. Ground loop noise can be kept as low as a few microvolts and usually appears as line frequency or one of its low harmonics.

2.5.3 Analog Circuit Noise

The current source and amplifiers inside the Model 370 make a contribution to measurement noise. Circuits were carefully chosen to have the maintain good noise performance over a wide resistance range without generating high leakage currents that could self heat resistors. Leakage current limits the practical current excitation range of the Model 370 to a few picoamps. Most analog circuit noise is distributed over a broad frequency band. It is often referred to as 1/f noise because there is equal noise power in each decade of frequency. Instrument noise, specified in Table 1-1, is dominated by amplifier noise for low resistances and by resistor thermal noise for high resistances. Noise from both sources can be further reduced with longer filter settling time.

2.5.4 Digital Circuit Noise

All digitally controlled instruments emit some high-frequency noise both through the air and on their leads. Emission from a Model 370 is very low and will not affect resistance measurements or heat measured resistors if the instrument is installed properly. The high frequency noise can interfere with very sensitive measurements being made in the same Dewar. Interference can be minimized by separating the instruments and their leads outside the Dewar and placing ferrite beads on the Model 370 measurement leads, near the Dewar, to stop the noise from getting inside. Wrapping leads through the large beads more than one time improves their attenuation of unwanted signals. Lake Shore sells a clamp on ferrite bead as part number 2071. A more common source of digital noise than the instrument itself is digital computers used for data acquisition. Computers with their high clock seeds generate a wide spectrum of noise and transmit it through line cords and interface cables. Isolation in the Model 370 separates the measurement circuits from interface circuits but computers must still be treated carefully during installation of a system.

2.5.5 Resistor Thermal Noise

Thermal noise or Johnson noise is the most common noise associated with resistors. This noise is present in all resistors, is independent of excitation and has a flat frequency spectrum. The equation for Johnson noise is often expressed as **Vnoise = (4kTRΔf)** $^{1/2}$, where Vnoise is the RMS noise voltage, k is Boltzmann's constant (1.38×10^{-23} J/K), T is temperature in Kelvin and Δf is the noise bandwidth in Hz. Some considerations when using the equation, peak to peak noise will be within 5 times RMS noise more than 99% of the time, Δf can be calculated several ways and a common method is (π/2) f_{3db} where f_{3db} is the 3 dB bandwidth of the dominant low-pass filter in the measuring circuit. As a practical example, the noise voltage of a 100 kΩ resistor at room temperature using a 1 second filter is approximately 16 nV RMS or 80 nV PP which is 8% of a measurement made at 1 µV. When the resistor is cooled the thermal noise drops accordingly.

Please note that thermal noise is normally the biggest noise source in resistor being measured but not the only one. Metallic conductors approach the theoretical limit for thermal noise but other materials have additional noise, sometimes referred to as flicker noise, that has a 1/f spectrum. Flicker noise is different for every material, is proportional to current and can change with construction techniques including lead attachment. Shot noise, which is a product of the discrete nature of electron flowing through resistive materials, is insignificant in most measurement but can become measurable when current drops into the picoamp range.

2.5.6 Interference Between Two Model 370s

The phase sensitive detector in the Model 370 effectively cancels noise from external sources but it does have some difficulty canceling noise at or very near its own measurement frequency. An odd operating frequency was intentionally chosen to minimize the possibility that outside noise sources would be the same frequency as the instrument. One source of noise that can be very close to the measurement frequency of a Model 370 is another Model 370. When two or more instruments are operated with leads closely coupled in the same Dewar it is possible for them to beat against each other and cause small oscillations. If this happens, the measurement frequency of one instrument can be changed slightly to avoid interference.

2.5.7 Vibration Noise

Noise can be generated in lead cables when they are moved or vibrated. This noise can be related to the triboelectric effect or changes in capacitance between conductors in the cable. A sudden movement of measurement lead cables can overload the instrument momentarily when it is on the most sensitive ranges. Cables carrying small signals should be fastened down without putting strain on the connections.

2.6 MEASUREMENT ERROR

2.6.1 Warm Up and Temperature Drift

When the Model 370 is first turned on it should be allowed to warm up for at least 30 minutes before use to allow its internal temperature to stabilize. Warm up is an exaggerated form of temperature drift because the temperature change inside the enclosure is larger and faster than would be experienced in a laboratory setting. Temperature drift, change in reading with change in ambient temperature, is small in the Model 370 and seldom a significant factor in absolute accuracy. Measurement repeatability is often dominated by temperature drift and temperature change should be considered if the instrument is being installed in a rack. If possible, precision measurement instruments should not be placed in the same rack with large power supplies or other equipment that can change the rack temperature quickly. Instrument racks should be well ventilated to prevent the build up of heat.

2.6.2 Resistor Installation

Installation is an important part of resistor measurements at cryogenic temperatures. The measured resistor must be at the temperature of its surroundings for the measurement to be valid. Some installation suggestions for temperature sensors are given in Paragraph 2.9.3. These suggestions are applicable to any resistor.

2.6.3 Resistor Self-Heating and Thermal Resistance

A resistor self heats when the electrical power being put into the measured resistor is large enough to warm the resistor above the temperature of its surroundings. Electrical power gets into the resistor from both the necessary excitation current and undesirable noise (Paragraph 2.5). Errors from self-heating are dangerous because they can easily go undetected. One strategy for detecting these errors is to understand the thermal resistance of the resistor and predict its reaction to excitation and noise.

Self-heating (ΔTsh) is a product of the resistors thermal resistance (Rt) expressed in kelvin per watt (K/W) and excitation power (Ps) expressed in watts. **ΔTsh = Rt Ps**; Ps can be calculated as excitation current squared times measured resistance ($Ps = I^2 R$).

A familiar form of self-heating is sensor self-heating in resistive temperature detectors (RTDs) but the same principles apply to any resistor being measured. Specifications for the Model 370 include typical sensor characteristics for a Germanium RTD that estimates the thermal resistance of the sensor. This example demonstrates how excitation current must be reduced to compensate for the increase in thermal resistance at lower temperature. Otherwise self-heating would become a significant part of the overall accuracy. Calculations like this are difficult to do for two reasons, first, manufactures do not always publish specifications on thermal resistance and second, the actual thermal resistance is very dependent on installation. An explanation of how to calculate thermal resistance of a temperature sensor is given in the Lake Shore Temperature Measurement and Control Catalog, Appendix A.

With an estimate of thermal resistance, the effect of increased excitation current can be predicted. If self-heating behavior does not match the prediction, noise power may be high enough to heat the resistor.

2.6.4 Lead Resistance

Measurement leads in cryogenic systems routinely have resistance of tens or even hundreds of ohms. Lead wire is chosen for its thermal properties first and electrical resistance is a secondary consideration. The Model 370 measurement circuits can tolerate significant lead resistance without measurement error. A lead resistance specification of 100 Ω plus 10% of resistance range (for each of the four leads) is given for most excitation currents. This lead resistance will give a measurement error that is small compared to the specified accuracy on the resistance range and in most cases the error is not measurable. The lead resistance specification is reduced to 10 Ω plus 10% of resistance range for the highest current excitations. At the higher currents, lead resistance of 100 Ω can create drops of several volts in each lead. These large voltage swings will measurably affect the millvolt and microvolt resistor measurements. If lead resistance exceeds the specified values, the instrument will measure with reduced accuracy until the compliance voltage of approximately 7 V RMS is reached. Keep the resistance in all of the leads similar whenever possible to maintain measurement balance.

2.6.5 Current Leakage

Lead wiring cannot be taken for granted when determining accuracy of cryogenic resistance measurements. Cryostats are notorious for having bundles of long, thinly insulated leads tightly wrapped around every available heat sink area. Shorts are inevitable. Lead wires should be "ohmed out" on a regular basis to test for short circuits that develop over time and thermal cycling.

2.6.6 Cable Capacitance

Cable capacitance and measured resistance act together as a low-pass filter to attenuate the desired measurement signal and shift its phase. Low excitation frequency was chosen for the Model 370 to minimize this effect but capacitance can still contribute to measurement error when resistance is high. Driven guards should be used when measuring resistance above 100 kΩ but they often cannot be used inside of the cryostat and are not available for scanner input leads.

The effect of cable capacitance on unguarded leads can be estimated by the following equation. This equation is only an estimate because it models the lead capacitance as a single capacitor across the measured resistor. In a practical installation there is capacitance from each lead to shield or ground in addition to capacitance across the resistor. Actual results depend on cable construction and installation techniques. The equation does account for both magnitude attenuation caused by capacitor impedance in parallel with the resistor and phase attenuation caused by phase sensitive detection of the input signal.

$$R_{attenuated} = R/(1+\omega^2C^2R^2)$$

Where: $R_{attenuated}$ = Resistance seen by the instrument
R = Actual resistance in ohms
$\omega = 2\pi f$
f = Frequency in Hz (default 13.7Hz)
C = Cable capacitance in farads (choose largest of one times lead to lead or lead to shield)

Lead inductance can create similar effects but typical installation techniques will not produce large enough inductance to cause measurable attenuation. Inductance should be considered if inductive noise reduction filters are placed in series with leads.

2.6.7 Instrument Operation

There are several features of the Model 370 intended to improve accuracy and repeatability that can have the opposite effect when used improperly. This paragraph provides a brief summary of operating features that may contribute to measurement uncertainty.

Use of the Model 370 with the Model 3716 Scanner can improve or degrade measurement performance depending on application. The scanner can be calibrated in the field to eliminate gain error but the addition of a large number of lead wires is always unpredictable. More information on the Model 3716 Scanner is given in Paragraph 2.8.

Measurement uncertainty increases significantly if the instrument hardware and firmware filters are not allowed to settle completely. Information on settling time is given in Paragraph 2.4.6.

The common mode reduction feature can significantly reduce common mode voltage on the measurement leads when used as described in Paragraph 2.4.5.5. Be sure that all four measurement leads remain isolated from measurement common (shield) when using the feature.

If one lead is grounded the instrument is able to make resistance measurements as long as the common mode reduction feature is turned off. This is not a recommended operating mode and accuracy is reduced. Increase in measurement error will not exceed 0.1% in a typical installation.

The Model 370 is calibrated and specified at its default measurement frequency of 13.7 Hz. An additional calibration is done at each of the two alternate measurement frequencies to compensate for the frequency response of the hardware filters. This calibration eliminates instrument errors only and will not account for attenuation caused by lead capacitance that is different at each frequency.

The autorange algorithm includes a hysteresis band to prevent instability when the measured resistor is at a range boundary. It is possible for the instrument to choose a different excitation current when approaching a value from below than it chooses when approaching from above. Autorange should not be used when a specific excitation current is critical.

2.7 OPERATING TRADEOFFS

Any measurement must be optimized to provide the best practical result and tradeoffs must be made to favor the most important measurement characteristics. Some of the common tradeoffs of low temperature resistance measurement are described below.

2.7.1 Resistor Self-heating vs. Excitation

Even after leads are properly heat sunk and noise is effectively shielded there can be a temperature error in resistance measurements that comes from within. Self-heating will occur when the power from excitation current is large enough to warm the resistor above the temperature of its surroundings. The effect is most noticeable at low temperatures because the thermal conduction at material boundaries (thermal boundary resistance) becomes very poor. Proper attachment of the resistor to the cooling source is critical but cannot eliminate the problem entirely.

If noise is not suspected as a potential problem, it is may be easier to measure the *effect* of self-heating using the many current ranges available in the Model 370 than try to calculate thermal resistance. Begin by cooling the resistor to the desired temperature and measure its value using current excitation and select a current in the middle of the available choices. Step the current down a range, approximately a decade in power, and measure resistance again. A change in measured value indicates self-heating was present on the higher range. Continue reducing current until the change is no longer significant to the measurement. If the first step down did not indicate self-heating, step current up to improve resolution. Thermal resistance changes with temperature so this process must be repeated at several temperatures.

2.7.2 Excitation vs. Signal-to-Noise

Since excitation power has such a dramatic effect on self-heating, why doesn't everyone use the lowest excitation range? The answer is noise, or more appropriately signal to noise. Noise from a variety of sources affects the small signals used to make bridge measurements. Lowering excitation makes the signals even smaller but unfortunately doesn't decrease the noise. The noise sources described in Paragraph 2.5 are a fact of life. Even with careful installation their effects cannot be reduced below a few microvolts. That is why the Model 370 does not have voltage excitation below 2 μ. The goal of most experiments is to choose an excitation that is the best compromise between self-heating and signal to noise. The monitor output (Paragraph 3.6) can be used to view the amplified signal coming into the input of the Model 370. Seeing the amplitude and frequency of noise at this point can help identify its sources as an aid in troubleshooting.

2.7.3 Signal-to-Noise vs. Measurement Bandwidth

The noise sources described Paragraph 2.5 combine to reduce the resolution of small signal measurements. There are some common themes in the way noise interacts with measurements, noise affects worsen when signal size decreases, when resistance increases and when bandwidth increases. Excitation is limited by self-heating and cannot always be increased to create larger signals. Resistance can seldom be changed because it is the quantity being measured. That leaves bandwidth to overcome signal to noise and improve resolution. *If noise cannot be reduced at its source it has to be averaged out.* Reducing measurement bandwidth can help with nearly every continuous noise source including induced noise at discrete frequencies, 1/f circuit noise and broadband thermal noise. Unfortunately there is a price to pay and it is time.

All small signal measurement instruments include some type of bandwidth limiting to improve resolution. The band limiting capabilities are so closely tied to instrument performance that most resolution specifications are given at a specified time constant or bandwidth. The Model 370 uses a combination of analog band pass and low-pass filters and digital averaging. The phase sensitive detector (PSD) in the Model 370 is a very narrow band pass filter. The output of the PSD is run through an analog low-pass filter with 200 ms time constant to give an equivalent DC voltage. The user cannot change these two filters making the widest bandwidth possible on the Model 370 200 ms. Once the DC voltage is digitized the user can choose additional digital averaging to reduce bandwidth further and increase resolution.

Unfortunately, reducing bandwidth increases time constant and settling time slows the instrument response to real changes in resistance; because those changes are averaged along with the noise. Probably the most frustrating aspect of using a resistance bridge is realizing that when noise can be as large as the signal being measured it takes a lot of time averaging to separate the two. Back to the thermal noise example above, if the noise voltage of a 100 kΩ resistor at room temperature using a 1 second filter is approximately 80 nV PP, reducing it by a decade to 8 nV PP would require increasing time constant 100 s (bandwidth to 10 ms). This reality is unappealing to most investigators because actual changes in resistance that take less than a few hundred seconds could easily be missed.

2.8 MODEL 3716/L and 3708 SCANNER

The Model 3716 /L Scanners expand the input capability of the Model 370 from 1 to 16 channels. The 3716L provides different measurement circuitry to allow better, low resistance measurements. The 3708 expands the input capability of the Model 370 from 1 to 8 channels and provides an even lower noise, low resistance measurement. Refer to section 1.1 for details on the differences between the available scanners.

The scanners are made up of relay switches for current and voltage signals of each channel, a times 100 amplifier for the voltage signals going back to the Model 370 and necessary control circuits. The scanner is housed in a separate shielded enclosure so that it can be placed near the test Dewar. Power for the scanner is taken directly from the regulated DC power supplies of the Model 370. Mounting bracket and 10 foot cables to join the Model 370 are included with the scanner. Mating connectors are supplied for the scanner inputs.

All scanner circuits including its power supplies and enclosure are referenced to the isolated measurement common in the instrument. This arrangement protects low level measurement signals from noise. All inactive input leads are shorted to common to minimize noise pickup. Special care must be taken during installation to maintain low noise operation. Refer to Paragraph 3.5 for scanner installation.

The Model 370 can read any of the 16 scanner channels, one at a time. Channel change can be done manually or with the autoscan feature. The instrument stores input setup information for each channel and will use the appropriate setup for each channel when selected. Refer to Paragraph 4.8 for scanner operation.

2.8.1 Scanner Performance

Up to 16 resistors with up to 64 leads can be attached to the Model 3716/L Scanner. Up to 8 resistors with up to 32 leads can be attached to the Model 3708 Scanner. The large number and potential length of lead wires provide an excellent path for noise to couple into the measurement system. Proper installation combined with the noise reduction features built into both the Model 370 and Model 3716/L and 3708 can minimize the effects but a full loaded scanner may never be as quiet as a single guarded and shielded resistance input. A measurable increase in noise is most likely when measuring large resistance of more than 100 kΩ. Large resistances pose an additional problem because the guards available for a single resistance input end at the scanner enclosure. Scanner and lead capacitance after that point can attenuate measurement signals for large resistors.

On the other hand, the times 100 amplifier in the scanner can actually reduce measurement noise in installations that require the Model 370 to be a significant distance from the test Dewar. The built-in amplifier in the scanner may improve measurements any time long input leads are required, even if only one channel is being used.

Accuracy is not as big a concern as noise when using the Model 3716/L and 3708 Scanners. The Model 370 AC measurement eliminates any voltage offsets that may be present in the scanners relays or amplifier. The amplifier gain is calibrated at the factory and can be recalibrated in the field to keep scanner gain error well below overall measurement uncertainty.

Settling time is a concern any time multiple inputs are multiplexed and must be scanned. The channel change settling time of the Model 3716L and 3708 Scanners are virtually the same as the range change settling time of the Model 370. Additional time may be required for the instrument to autorange if that feature is enabled and the resistance on the new channel changes significantly between scans.

2.8.2 Controlling Temperature While Scanning

The close integration of the Model 370 and Model 3716 Scanner permits fast efficient scan channel changes making it possible to both control temperature and take data with the same instrument. Firmware in the Model 370 manages automatic switching between the control channel and scan channel and it will freeze the control heater output when the control channel is not active. Even with these features, scanning during closed loop temperature control will never be as stable as a dedicated control instrument.

The biggest causes of control instability are the subtle changes in cooling power that are present in low temperature cooling systems. These changes are offset by changes in heater output during closed loop control to keep temperature constant. When the instrument is scanning other channels it cannot read the control feedback sensor for several seconds or tens of seconds at a time. When the control channel is inactive the control output freezes (creating open loop control) and changes in cooling power result in changing temperature. The amount of instability depends on speed and mass of the cooled load. Scanning while controlling should be reserved for the least critical temperature control applications. All instrument specifications for temperature control are for continuous closed loop control without scanning.

2.9 TEMPERATURE MEASUREMENT

Temperature measurement is a popular use of resistance bridges because most of the temperature sensors that can operate at low temperatures are negative temperature coefficient resistive temperature detectors (NTC RTDs) and need the flexibility of a bridge. Resistive temperature sensors must be treated with the same care as any other resistor being measured at low temperatures. The Model 370 is well equipped to measure and control temperature using these devices.

2.9.1 Sensor Selection

Lake Shore offers a full line of cryogenic temperature sensors including several models that are well suited for low temperature work to 50 mK and below. Two of the most popular are Germanium and Ruthenium Oxide RTDs. The Lake Shore Temperature Measurement and Control catalog gives detailed specifications of these sensors and should be consulted as a reference when choosing temperature sensors. The Model 370 will work with resistive temperature sensors from Lake Shore or any other manufacture. A few important selection criteria are discussed below.

2.9.1.1 Sensitivity

Sensitivity is often the most important criteria when selecting a temperature sensor because it dictates many of the other specifications including range, resolution and accuracy. Many NTC resistive materials like germanium have a beneficial characteristic of temperature sensitivity that makes them particularly useful at low temperatures. The resistance and sensitivity of these materials increase exponentially as temperature decreases. The sensitivity of the sensors is best at the

lowest temperatures where signal to noise is worst, making them useful at lower temperatures than a linear device of the same resistance.

2.9.1.2 Temperature Range

Every type of sensor has an upper and lower limit to its temperature range. The upper limit of an NTC resistor is normally the point at which sensitivity falls so low that the sensor is no longer useful. The exact temperature where this happens is determined by the sensor itself, instrumentation capabilities and required resolution. Sensors that have a few micro kelvin resolution at 50 mK may have a resolution of several kelvin at room temperature. The sensor may be useful to monitor warm up and cool down but has little experimental value.

The lower limit of an NTC resistor is the temperature at which self-heating makes the measurement impractical. As temperature decreases the thermal resistance between sensor and load increases and eventually the heat of excitation can no longer be dissipated into the load. A nice feature of NTC resistors is that resistance increases as temperature decreases and, if the voltage across the sensor is limited, excitation power in the sensor decreases to offset the increase in thermal resistance. Unfortunately there is always a temperature at which self-heating wins and it is usually between 10 mK and 50 mK. The exact temperature depends on the sensor construction, mounting and instrumentation used for readout.

2.9.1.3 Temperature Resolution

Temperature measurement resolution is controlled to a large extent by sensor sensitivity when using a resistance bridge. The temperature example given in the instrument specifications shows the sensitivity of a typical germanium RTD changing from 3.5 MΩ/K at 50 mK to 36 Ω/K at 1 K. An associated change in resolution is also shown as 1.7 µK at 50 mK to 83 µK at 1 K. The reason that the drop in resolution is not as severe as the drop in sensitivity is that excitation current is increased approximately 1,000 times by the Model 370 to maintain practical measurement parameters. Sensitivity (and therefore resolution) of most sensors changes with temperature so it is important to choose a sensor with high sensitivity in the most critical temperature range. Two or more sensors may be necessary to cover a large range of temperature with high resolution.

2.9.1.4 Accuracy

Resistive thermometers serve well as secondary standards and are much easier to use than most primary thermometers. Accuracy of a resistive temperature sensor depends on how closely it is compared to a primary standard, how the temperature scale is interpreted, how much the sensor drifts over time and how well the conditions used in calibration are duplicated when the sensor is being used. General rules to achieve best accuracy, choose a sensor with good stability and high sensitivity in the most critical temperature range, calibrate it carefully or purchase a calibration from a reputable company, install the sensor according to manufacture recommendations and use the same excitation that was used during calibration. Do not forget to include instrumentation errors when determining overall accuracy and recalibrate both sensors and instruments on a regular basis. If the pieces are put together properly, accuracy of a few millikelvin is possible at low temperatures.

2.9.1.5 Packaging

Sensor packaging is important for two main reasons. First, the package creates sensor contact with its environment playing a key role in the overall thermal resistance. Second, the package protects the resistive element from stress that is normally caused by thermal contraction as the load cools. When choosing a pre-packaged sensor watch for a specification of thermal resistance or a recommended maximum excitation to make sure it is compatible with the experiment and measuring instruments. Also make sure the package is "strain free" or makes some accommodation to reduce stress on the resistive element during thermal cycling. Many sensors are also offered without packaging for applications that require smaller size or lower mass than packaged sensors provide. These must be installed with the greatest care and all manufacture recommendations should be followed.

2.9.1.6 Environment

All cryogenic temperature sensors have to contend with high vacuum and drastic temperature changes but some experiments create an even more hostile environment by adding high magnetic fields, ionizing radiation and more. These additional requirements make sensor selection more difficult because they can limit the useful range of many sensors. The Lake Shore Temperature Measurement and Control catalog includes magnetic field dependence for most temperature sensors. Other specific data on environmental factors is included when available. Lake Shore Cernox RTDs are an excellent choice for many of these critical applications.

2.9.2 Sensor Calibration

The Model 370 can convert the resistance of a sensor to temperature if a temperature response curve is loaded into the instrument. Most curves are generated from an individual sensor calibration because few sensors follow a standard curve at low temperatures. The instrument can use curve options, called CalCurves, available with Lake Shore calibrated sensors or curves generated by the user. The Lake Shore Temperature Measurement and Control catalog gives complete specifications for calibrated sensors and gives the calibration range available for each sensor.

When calibrating sensors in house remember to account for error caused by interpolation between curve breakpoints. The Model 370 allows curves with up to 200 breakpoints and uses linear interpolation between breakpoints. Linear interpolation is considered by some to be less accurate than polynomial interpolation but it is more predictable. If linear interpolation errors are larger than desired in a specific temperature range more breakpoints can be added to reduce the error. NTC resistor breakpoints are entered as Log Ω vs. K which acts to linearize temperature response data. Polynomial interpolation has the potential to calculate a result that is well off the curve if data points are not smoothed properly and there is a small discontinuity between breakpoints.

2.9.3 Sensor Installation

This section highlights some of the important elements of proper temperature sensor installation. Information on installing temperature sensors applies equally well to other resistance measurements. For more detailed information, Lake Shore sensors are shipped with installation instructions covering that specific sensor type and package. The Lake Shore Temperature Measurement and Control Catalog includes an installation section as well. Lake Shore also offers a line of Cryogenic Accessories. Many of the materials discussed here are available through Lake Shore and can be ordered with sensors or instruments.

2.9.3.1 Mounting Materials

Choosing appropriate mounting materials is very important in a cryogenic environment. The high vacuum used to insulate cryostats is one source of problems. Materials used in these applications should have a low vapor pressure so they do not evaporate or out-gas and spoil the vacuum insulation. Metals and ceramics do not have this problem but greases and varnishes must be checked. Another source of problems is the wide extremes in temperature most sensors are exposed to. The linear expansion coefficient of a materials becomes important when temperature changes are so large. Never try to permanently bond materials with linear expansion coefficients that differ by more than three. A flexible mounting scheme should be used or the parts will break apart, potentially damaging them. The thermal expansion or contraction of rigid clamps or holders could crush fragile samples or sensors that do not have the same coefficient. Thermal conductivity is a property of materials that can change with temperature. Do not assume that materials that work well at room temperature will do the same job at low temperatures.

2.9.3.2 Sensor Location

Finding a good place to mount a sensor in an already crowded cryostat is never easy. There are fewer problems if the entire load and sample holder are at the same temperature, unfortunately, this not the case in many systems. Temperature gradients (differences in temperature) exist because there is seldom perfect balance between the cooling source and heat sources. Even in a well-controlled system, unwanted heat sources like thermal radiation and heat conducting through mounting structures can cause gradients. For best accuracy, sensors should be positioned near the sample, so that little or no heat flows between the sample and sensor. This may not, however, be the best location for temperature control as discussed below.

2.9.3.3 Thermal Conductivity

The ability of heat to flow through a material is called thermal conductivity. Good thermal conductivity is important in any part of a cryogenic system that is intended to be the same temperature. Copper and aluminum are examples of metals that have good thermal conductivity, while stainless steel does not. Metals that super conduct tend to be better thermal conductors when normal and poor thermal conductors below their transition temperature. Non-metallic, electrically insulating materials like alumina oxide and similar ceramics have good thermal conductivity, while G-10 epoxy-impregnated fiberglass does not. Sensor leads should have poor thermal conductivity. Sensor packages, cooling loads, and sample holders should have good thermal conductivity to reduce temperature gradients. Surprisingly, the connections between thermally conductive mounting surfaces often have very poor thermal conductivity.

2.9.3.4 Contact Area

Thermal contact area greatly affects thermal conduction because a larger area has more opportunity to transfer heat. Even when the size of a sensor package is fixed, thermal contact area can be improved with the use of a gasket material. A soft gasket material forms into the rough mating surface to increase the area of the two surfaces that are in contact. Good gasket materials are soft, thin, and have good thermal conductivity. They must also withstand the environmental extremes. Indium foil (when not super conducting) and cryogenic grease are good examples.

2.9.3.5 Contact Pressure

When sensors are permanently mounted, the solder or epoxy used to hold the sensor act as both gasket and adhesive. Permanent mounting is not a good solution for everyone because it limits flexibility and can potentially damage sensors. Much care should be taken not to over heat or mechanically stress sensor packages. Less permanent mountings require some pressure to hold the sensor to its mounting surface. Pressure greatly improves the thermal resistance of joints and reduces thermal gradients. A spring clamp is recommended so that different rates of thermal expansion do not increase or decrease pressure with temperature change.

2.9.3.6 Lead Wire

Different types of sensors come with different types and lengths of electrical leads. In general a significant length of lead wire must be added to the sensor for proper heat sinking and connecting to a bulk head connector at the vacuum boundary. The lead wire must be an electrical conductor, but should not be a good *thermal* conductor, or heat will transfer down the leads and change the temperature reading of the sensor. Small 30 to 40 AWG wire made of an alloy like Manganin or phosphor bronze is much better than copper wire. Super conducting wire is a good choice if wire temperature remains below the transition temperature. Thin wire insulation is preferred for better heat sinking. Twisted wire is recommended if electrical noise is present. The wire used on the room temperature side of the vacuum boundary is not critical so shielded copper cable is normally used.

2.9.3.7 Lead Soldering

When additional wire is soldered to short sensor leads, care must be taken not to overheat the sensor. A heat sink such as a metal wire clamp or alligator clip will heat sink the leads and protect the sensor. Lead wires should be tinned before bonding to reduce the time that heat is applied to the sensor lead. Solder flux should be cleaned after soldering to prevent corrosion.

2.9.3.8 Heat Sinking Leads

Sensor leads can be a significant source of error if they are not properly heat sinked. Heat will transfer down even small leads and alter the sensor reading. The goal of heat sinking is to cool the leads to a temperature as close to the sensor as possible. This can be accomplished by putting a significant length of lead wire in thermal contact with every cooled surface between room temperature and the sensor. Lead wires can be adhered to cold surfaces with varnish over a thin electrical insulator like cigarette paper. They can also be wound onto a bobbin that is firmly attached to the cold surface. Some sensor packages include a heat sink bobbin and wrapped lead wires to simplify heat sinking.

2.9.3.9 Thermal Radiation

Thermal (black body) radiation is one of the ways heat is transferred. Warm surfaces radiate heat to cold surfaces even through a vacuum. The difference in temperature between the surfaces is one thing that determines how much heat is transferred. Thermal radiation causes thermal gradients and reduces measurement accuracy. Many cooling systems include a radiation shield. The purpose of the shield is to surround the load, sample, and sensor with a surface that is at or near their temperature to minimize radiation. The shield is exposed to the room temperature surface of the vacuum shroud on its outer surface, so some cooling power must be directed to the shield to keep it near the load temperature. If the cooling system does not include an integrated radiation shield (or one cannot be easily made), one alternative is to wrap several layers of super-insulation (aluminized Mylar) loosely between the vacuum shroud and load. This reduces radiation transfer to the sample space.

2.10 TEMPERATURE CONTROL

The Model 370 includes the necessary electronics to perform closed-loop temperature control in a dilution refrigerator or other low power cryogenic cooling system. The load must be equipped with a temperature sensor for feedback and a resistive heater to add heating power into the system. The instrument, sensor, and heater play important roles in establishing stable temperature control.

2.10.1 Considerations For Good Control

Most of the techniques discussed above to improve cryogenic temperature measurement apply to control as well. There is an obvious exception in sensor location and a compromise is suggested in Paragraph 2.10.3.

2.10.1.1 Thermal Conductivity

Good thermal conductivity is important in any part of a cryogenic system that is intended to be at the same temperature. Most systems begin with materials that have good conductivity themselves, but as sensors, heaters, sample holders, etc., are added to an ever more crowded space, the junctions between parts are often overlooked. In order for control to work well, junctions between the elements of the control loop must be in close thermal contact and have good thermal conductivity. Gasket materials should always be used along with reasonable pressure.

2.10.1.2 Thermal Lag

Poor thermal conductivity causes thermal gradients that reduce accuracy and also cause thermal lag that make it difficult for controllers to do their job. Thermal lag is the time it takes for a change in heating or cooling power to propagate through the load and get to the feedback sensor. Because the feedback sensor is the only thing that lets the controller know what is happening in the system, slow information to the sensor slows the response time. For example, if the temperature at the load drops slightly below the setpoint, the controller gradually increases heating power. If the feedback information is slow, the controller puts too much heat into the system before it is told to reduce heat. The excess heat causes a temperature overshoot, which degrades control stability. The best way to improve thermal lag is to pay close attention to thermal conductivity both in the parts used and their junctions.

2.10.1.3 Two-Sensor Approach

There is a conflict between the best sensor location for measurement accuracy and the best sensor location for control. For measurement accuracy the sensor should be very near the sample being measured, which is away from the heating and cooling sources to reduce heat flow across the sample and therefore thermal gradients. The best control stability is achieved when the feedback sensor is near both the heater and cooling source to reduce thermal lag. If both control stability and measurement accuracy are critical it may be necessary to use two sensors, one for each function.

Another reason to use a separate control sensor is that a dedicated control sensor can be run with higher excitation power. The additional power will reduce the accuracy of the feedback sensor but create a larger signal for better control stability. Accuracy of the control sensor is not important if the temperature sample is measured with a different sensor.

2.10.1.4 Thermal Mass

Cryogenic designers understandably want to keep the thermal mass of the load as small as possible. Small mass can have the advantage of reduced thermal gradients but controlling a very small mass is difficult because there is no buffer to adsorb changes in cooling power. Without buffering, small disturbances can very quickly create large temperature changes. In some systems it is necessary to add a small amount of thermal mass in order to improve control stability.

2.10.1.5 System Nonlinearity

Because of nonlinearities in the control system, a system controlling well at one temperature may not control well at another temperature. While nonlinearities exist in all temperature control systems, they are most evident at cryogenic temperatures. When the operating temperature changes the behavior of the control loop, the controller must be retuned. As an example, a thermal mass acts differently at different temperatures. The specific heat of the load material is a major factor in thermal mass and the specific heat of materials like copper change as much as three orders of magnitude when cooled from 100 K to 10 K. Changes in cooling power and sensor sensitivity are also sources of nonlinearity.

The cooling power of most cooling sources also changes with load temperature. This is very important when operating at temperatures near the highest or lowest temperature that a system can reach. Nonlinearities very close to these high and low temperatures make it very difficult to configure them for stable control. If difficulty is encountered, it is recommended to gain experience with the system at temperatures further away from the limit and gradually approach it in small steps.

Keep an eye on temperature sensor sensitivity. Sensitivity not only affects control stability but it also contributes to the overall control system gain. The large changes in sensitivity that make some sensors so useful may make it necessary to retune the control loop more often.

2.10.2 Closed Loop PID Control

Closed loop PID control, often called feedback control, is the control mode most often associated with temperature controllers. In this mode the controller attempts to keep the load at exactly the user entered setpoint that can be entered in resistance or temperature. To do this, it uses feedback from the control sensor to calculate and actively adjust the control (heater) output. The Model 370 uses a control algorithm called PID that refers to the three terms used to tune the controller for each unique system.

The PID control equation has three variable terms: proportional (P), integral (I), and derivative (D). See Figure 2-4. Changing these variables for best control of a system is called tuning. The PID equation in the Model 370 is:

$$HeaterOutput = P\left[e + I\int(e)dt + D\frac{de}{dt}\right]$$

where the error (e) is defined as: e = Setpoint – Feedback Reading.

2.10.2.1 Proportional (P)

The Proportional term, also called gain, must have a value greater than zero for the control loop to operate. The value of the proportional term is multiplied by the error (e) which is defined as the difference between the setpoint and feedback temperatures, to generate the proportional contribution to the output: Output (P) = Pe. If proportional is acting alone, with no integral, there must always be an error or the output will go to zero. A great deal must be known about the load, sensor, and controller to compute a proportional setting (P). Most often, the proportional setting is determined by trial and error. The proportional setting is part of the overall control loop gain, and so are the heater range and cooling power. The proportional setting will need to change if either of these change.

2.10.2.2 Integral (I)

In the control loop, the integral term, also called reset, looks at error over time to build the integral contribution to the output:

$$Output(I) = P \cdot {}^{1}\!/_{I}\int(e)dt$$

By adding the integral to proportional contributions, the error that is necessary in a proportional only system can be eliminated. When the error is at zero, controlling at the setpoint, the output is held constant by the integral contribution. The integral setting (I) is more predictable than the proportional setting. It is related to the dominant time constant of the load. As discussed in Paragraph 2.7.3, measuring this time constant allows a reasonable calculation of the integral setting. In the Model 370, the integral term is set in seconds and a *smaller setting creates a* ***more*** *active integrator*.

2.10.2.3 Derivative (D)

The derivative term, also called rate, acts on the change in error with time to make its contribution to the output:

$$Output(D) = PD\frac{de}{dt}.$$

By reacting to a fast changing error signal the derivative can work to boost the output when the setpoint changes quickly, reducing the time it takes for temperature to reach the setpoint. It can also see the error decreasing rapidly when the temperature nears the setpoint and reduce the output for less overshoot. The derivative term can be useful in fast changing systems but it is often turned off during steady state control because it reacts too strongly to small disturbances or noise. The derivative setting (D) is related to the dominant time constant of the load similar to the integral (I) and is also set in seconds but a *smaller setting creates a* ***less*** *active derivative*.

2.10.2.4 Manual Output

The Model 370 has a control parameter that is not a normal part of a PID control loop. Manual output can be used for open loop control, meaning feedback is ignored and the heater output stays at the users manual setting. This is a good way to put constant heating power into a load when needed. The manual output term can also be added to the PID output. Some users prefer to set an output value near that necessary to control at a setpoint and let the closed loop make up the small difference.

NOTE: Manual Output should be set to 0 when not in use.

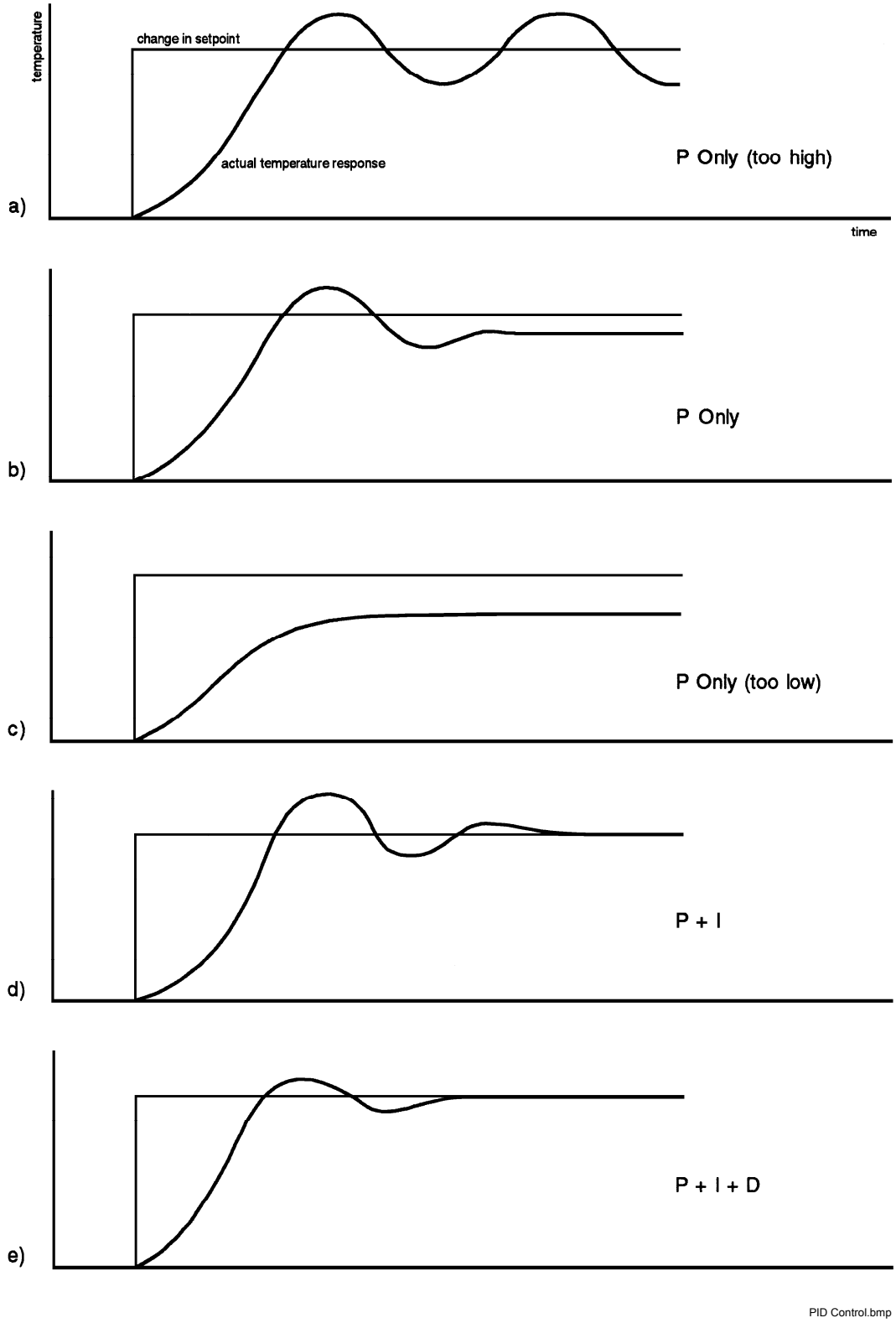

Figure 2-4. Examples of PID Control

2.10.3 Tuning a Closed Loop PID Controller

There has been a lot written about tuning closed loop control systems and specifically PID control loops. This section does not attempt to compete with control theory experts. It describes a few basic rules of thumb to help less experienced users get started. This technique will not solve every problem, but it has worked for many others in the field. This section assumes the user has worked through the operation sections of this manual and has a stable temperature reading from the control sensor. It is also a good idea to begin at the center of the temperature range of the cooling system (not close to its highest or lowest temperature).

2.10.3.1 Setting Heater Range

Setting an appropriate heater output range is an important first part of the tuning process. *The heater range should allow enough heater power to comfortably overcome the cooling power of the cooling system*. If the heater range will not provide enough power, the load will not be able to reach the setpoint temperature. If the range is set too high, the load may have very large temperature changes that take a long time to settle out. Delicate loads can even be damaged by too much power.

Often there is little information on the cooling power of the cooling system at the desired setpoint. If this is the case, try the following: Allow the load to cool completely with the heater off. Set manual heater output to 50% while in Open Loop control mode. Turn the heater to the lowest range and write down the temperature rise (if any). Select the next highest heater range and continue the process until the load warms up through its operating range. Do not leave the system unattended; the heater may have to be turned off manually to prevent overheating. If the load never reaches the top of its operating range, some adjustment may be needed in heater resistance or an external power supply may be necessary to boost the output power of the instrument.

The list of heater range versus load temperature is a good reference for selection the proper heater range. It is common for systems to require two or more heater ranges for good control over their full temperature. Lower heater ranges are normally needed for lower temperature. The Model 370 is of no use controlling at or below the temperature reached when the heater was off.

2.10.3.2 Tuning Proportional

The proportional setting is so closely tied to heater range that they can be thought of as fine and course adjustments of the same setting. An appropriate heater range must be known before moving on to the proportional setting.

Begin this part of the tuning process by letting the cooling system cool and stabilize with the heater off. Place the Model 370 in closed loop PID control mode, then turn integral, derivative and manual output settings off. Enter a setpoint above the cooling systems lowest temperature. Enter a low proportional setting of approximately 5 or 10 and then enter the appropriate heater range as described above. The heater display should show a value greater than zero and less than 100% when temperature stabilizes. The load temperature should stabilize at a temperature *below* the setpoint. If the load temperature and heater display swing rapidly, the heater range or proportional value may be set too high and should be reduced. Very slow changes in load temperature that could be described as drifting are an indication of a proportional setting that is too low (which is addressed in the next step).

Gradually increase the proportional setting by doubling it each time. At each new setting, allow time for the temperature of the load to stabilize. As the proportional setting is increased, there should be a setting in which the load temperature begins a sustained and predictable oscillation rising and falling in a consistent period of time. See Figure 2-4(a). The goal is to find the proportional value in which the oscillation begins, do not turn the setting so high that temperature and heater output changes become violent. In many systems it is difficult to differentiate oscillation and noise. Operating the control sensor at higher than normal excitation power can help.

Record the proportional setting and the amount of time it takes for the load change from one temperature peak to the next. The time is called the oscillation period of the load. It helps describe the dominant time constant of the load, which is used in setting integral. If all has gone well, the appropriate proportional setting is *one half* of the value required for sustained oscillation. See Figure 2-4(b).

Tuning Proportional (Continued)

If the load does not oscillate in a controlled manner, the heater range could be set too low. A constant heater reading of 100% on the display would be an indication of a low range setting. The heater range could also be too high, indicated by rapid changes in the load temperature or heater output less than 10% when temperature is stable. There are a few systems that will stabilize and not oscillate with a very high proportional setting and a proper heater range setting. For these systems, setting a proportional setting of one half of the highest setting is the best choice.

2.10.3.3 Tuning Integral

When the proportional setting is chosen and the integral is set to zero (off), the Model 370 controls the load temperature below the setpoint. Setting the integral allows the Model 370 control algorithm to gradually eliminate the difference in temperature by integrating the error over time. See Figure 2-4(d). An integral setting that is too high causes the load to take too long to reach the setpoint. An integral setting that is too low can create instability and cause the load temperature to oscillate.

Begin this part of the tuning process with the system controlling in proportional only mode. Use the oscillation period of the load that was measured above in seconds as the integral setting. Enter the integral setting into the Model 370 and watch the load temperature approach the setpoint. If the temperature does not stabilize and begins to oscillate around the setpoint, the integral setting is too low and should be doubled. If the temperature is stable but never reaches the setpoint, the integral setting is too high and should be decreased by half.

To verify the integral setting make a few small (2 to 5 degree) changes in setpoint and watch the load temperature react. Trial and error can help improve the integral setting by optimizing for experimental needs. Faster integrals, for example, get to the setpoint more quickly at the expense of greater overshoot. In most systems, setpoint changes that raise the temperature act differently than changes that lower the temperature.

If it was not possible to measure the oscillation period of the load during proportional setting, start with an integral setting of 50. If the load becomes unstable double the setting. If the load is stable make a series of small setpoint changes and watch the load react. Continue to decrease the integral setting until the desired response is achieved.

2.10.3.4 Tuning Derivative

If an experiment requires frequent changes in setpoint or data taking between changes in the setpoint, derivative should be considered. See Figure 2-4(e). A derivative setting of zero, off, is recommended when the control system is seldom changed and data is taken when the load is at steady state.

The derivative setting is entered into the Model 370 in seconds and a good starting point is one fourth the integral setting in seconds.

Again, do not be afraid to make some small setpoint changes; halving or doubling this setting to watch the affect. Expect positive setpoint changes to react differently from negative setpoint changes.

CHAPTER 3

INSTALLATION

3.0 GENERAL

This chapter provides general installation instructions for the Model 370 AC Resistance Bridge. Please read this entire chapter before installing the instrument and powering it on to ensure the best possible performance and maintain operator safety. For instrument operating instructions refer to Chapter 4. For computer interface installation and operation refer to Chapter 6.

3.1 INSPECTION AND UNPACKING

Inspect shipping containers for external damage before opening them. Photograph any container that has significant damage before opening it. If there is visible damage to the contents of the container contact the shipping company and Lake Shore immediately, preferably within 5 days of receipt of goods. Keep all damaged shipping materials and contents until instructed to either return or discard them.

Open the shipping container and keep the container and shipping materials until all contents have been accounted for. Check off each item on the packing list as it is unpacked. Instruments themselves may be shipped as several parts. The items included with the Model 370 and optional scanners are listed below. Contact Lake Shore immediately if there is a shortage of parts or accessories. Lake Shore is not responsible for any missing items if not notified within 60 days of shipment.

Inspect all items for both visible and hidden damage that occurred during shipment. If damage is found, contact Lake Shore immediately for instructions on how to file a proper insurance claim. Lake Shore products are insured against damage during shipment but a timely claim must be filed before Lake Shore will take further action. Procedures vary slightly with shipping companies. Keep all shipping materials and damaged contents until instructed to either return or discard them.

If the instrument must be returned for recalibration, replacement or repair, a returned goods authorization (RGA) number must be obtained from a factory representative before it is returned. The Lake Shore RGA procedure is given in Paragraph 8.2.

Items Included with Model 370 AC Resistance Bridge

1 Model 370 Instrument
1 Model 370 User's Manual
1 Line Power Cord
2 Resistor Input Mating Connectors
1 Terminal Block Mating Connector, 6-Position
1 Fuse Pair for Alternative Voltage *

Items Included with Model 3716/L and 3708 Scanner

1 Model 3716/L scanner or 3708 scanner
1 Scanner Output to Resistance Input and Control Cable, 10 foot
1 Ground Strap for Scanner Enclosure
4 Scanner Input Mating Connectors
1 Scanner Mounting Bracket

* Included only when purchased with VAC-120-ALL Power Option.

3.2 REAR PANEL DEFINITION

This paragraph defines the rear panel of the Model 370. See Figure 3-1. Readers are referred to paragraphs that contain installation instructions and connector pin-outs for each feature. Definition of the Model 3716 Scanner is given in Paragraph 3.5. A summary of connector pin-outs is provided in Paragraph 8.11.

CAUTION: Verify that the AC line voltage indicator in the fuse drawer window shows the appropriate AC line voltage before turning he instrument on.

CAUTION: Make rear panel connections with the instrument power off.

①	**Line Input Assembly**	Includes the IEC 320-C14 line cord receptacle, instrument power switch, and line voltage selector with line voltage indicator and line fuse holder. Refer to Paragraph 3.3.
②	**RS-232 (DTE)**	9-pin D subminiature plug wired in DTE configuration for use with RS-232C serial computer interface. Refer to Paragraph 6.2 and see Figure 8-11.
③	**INPUT**	Two 6-pin (240°) Circular DIN 45322 receptacles for resistance measurement input. Refer to Paragraph 3.4 for use with one resistor or Paragraph 3.5 for use with the Model 3716 Scanner.
④	**SCAN CONTROL**	15-pin D subminiature receptacle provides power supply output and digital control connections for the Model 3716 Scanner. Refer to Paragraph 3.5.6.
⑤	**REFERENCE**	BNC receptacle provides connections for Frequency Reference Output. Refer to Paragraph 3.6.
⑥	**MONITOR**	BNC receptacle provides connections for Monitor Voltage Output. Refer to Paragraph 3.6.
⑦	**HEATER OUTPUT**	BNC receptacle provides current source output connections for the temperature control Heater Output. Refer to Paragraph 3.7.
⑧	**ANALOG OUT 1 and 2 (STILL)**	BNC receptacles provide connections for analog voltage output 1 and 2 (Still). The STILL output can be configured to heat the still of a dilution refrigerator. Refer to Paragraph 3.8.
⑨	**ALARM RELAYS**	Detachable terminal block provides alarm relay connections. Refer to Paragraph 3.9.
⑩	**IEEE-488 INTERFACE**	IEEE-488 compliant interface connector for use with IEEE-488 parallel computer interface. Refer to Paragraph 6.1 and see Figure 8-12. Requires extender (Lake Shore P/N 4005) if used at the same time as the Alarm Relays connector.

Rear Panel.bmp

Figure 3-1. Model 370 Rear Panel

3.3 LINE INPUT ASSEMBLY

This section describes how to properly connect the Model 370 to line power. Please follow these instructions carefully to ensure proper operation of the instrument and the safety of operators.

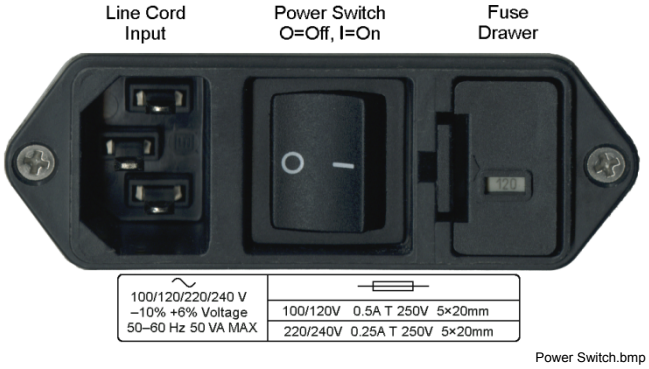

Figure 3-2. Line Input Assembly

3.3.1 Line Voltage

The Model 370 has four different AC line voltages configurations so that it can be operated from line power anywhere in the world. The nominal voltage and voltage range of each configuration is shown below. (The recommended setting for 230 V operation is 240 V.)

Nominal	Minimum	Maximum
100 V	90 V	106 V
120 V	108 V	127 V
220 V	198 V	233 V
240 V	216 V	254 V

Verify that the AC line voltage indicator in the fuse drawer window shows the appropriate AC line voltage before turning the instrument on. The instrument may be damaged if it is turned on with the wrong voltage selected. Instructions for changing the line voltage configuration are given in Paragraph 8.4.

3.3.2 Line Fuse and Fuse Holder

The line fuse is an important safety feature of the Model 370. If a fuse ever fails, it is important to replace it with the value and type indicated on the rear panel for the line voltage setting. The letter T on the fuse rating indicates that the instrument requires a time-delay or slow-blow fuse. Fuse values should be verified any time line voltage configuration is changed. Instructions for changing and verifying a line fuse are given in Paragraph 8.5.

3.3.3 Power Cord

The Model 370 includes a 3-conductor power cord that mates with the IEC 320-C14 line cord receptacle. Line voltage is present on the two outside conductors and the center conductor is a safety ground. The safety ground attaches to the instrument chassis and protects the user in case of a component failure. A CE approved power cord is included with instruments shipped to Europe; a domestic power cord is included with all other instruments (unless otherwise specified when ordered). Always plug the power cord into a properly grounded receptacle to ensure safe operation of the instrument.

The delicate nature of measurement being taken with this instrument may necessitate additional grounding including ground strapping of the instrument chassis. In these cases the operators safety should remain the highest priority and low impedance from the instrument chassis to safety ground should always be maintained.

3.3.4 Power Switch

The power switch is part of the line input assembly on the rear panel of the Model 370 and turns line power to the instrument On and Off. When the circle is depressed, power is Off. When the line is depressed, power is On.

3.4 RESISTOR INPUT CONNECTION AND CABLING

Signals being measured by the Model 370 are so small that the measurement environment must be taken into account when connecting resistors to the instrument input. This section describes not only how to attach a resistor to the Model 370 but also suggests ways to manage measurement noise. Understanding the information given in this section before installing the Model 370 can save hours of troubleshooting. Additional information on installing the Model 3716 Scanner is given in Paragraph 3.5.

3.4.1 Resistor Input Connector Definition

Two 6-pin (240°) Circular DIN 45322 receptacles are used for the resistance measurement input. One connector provides voltage source excitation connections (V) and the other provides current measurement connections (I). Both mate with 6-pin Circular DIN plug included with instrument (Lake Shore P/N G-106-233). Examples of lead arrangements are shown in Figure 3.3.

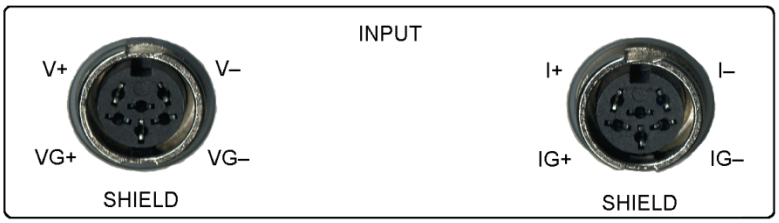

Input Connectors.eps

	INPUT V		INPUT I	
Pin	**Name**	Description	Name	Description
1	V–	Measurement voltage lead V–	I–	Measurement current lead I–
2	VG–	Guard or shield for voltage lead V–	IG–	Guard or shield for current lead I–
3	Shield	Shield tied to measurement common	Shield	Shield tied to measurement common
4	VG+	Guard or shield for voltage lead V+	IG+	Guard or shield for current lead I+
5	V+	Measurement voltage lead V+	I+	Measurement current lead I+
6	–	Shield tied to measurement common	–	Shield tied to measurement common
Body	–	Tied to measurement common	–	Tied to measurement common

NOTES:

1. The Model 370 makes an AC resistance measurement therefore the + and – signs are to aid in proper lead arrangement and not indicate signal polarity.
2. Active guards can be turned on or off by the user. In the off state the guard pins default to signal common but do not substitute for shields.

Figure 3-3. Resistance Input Connectors

3.4.2 Shielding and Twisting

The minimum cable configuration for the Model 370 is shown below. Voltage leads and current leads are twisted and run in shielded cable. The cable shield is tied to the shield pins on the input connectors. Paragraph 3.4.4 explains how the shield can be extended to the experimental Dewar without creating ground loops.

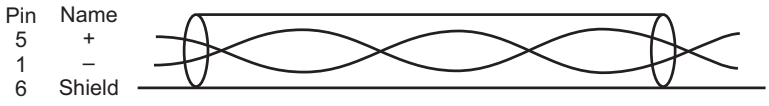

Shielded Twisted.eps

Figure 3-4. Twisted Shielded Cables (Typical for Current and Voltage Leads)

3.4.3 Driven Guards

A configuration of guarded and shielded cables is shown below and is recommended for long cables or when measuring large resistances. Variations may be necessary depending on the configuration of available tri-axial cable. Guards are tied only to the guard pins on the input connector and should never be tied together, tied to shields or terminated in any other way. They should always be left unattached at the resistor end of the cable. The cable shield is tied to the shield pins on the input connectors. Paragraph 3.4.4 explains how the shield can be extended to the experimental Dewar without creating ground loops. The guards themselves provide some shielding but they are not as effective as shields at reducing induced noise.

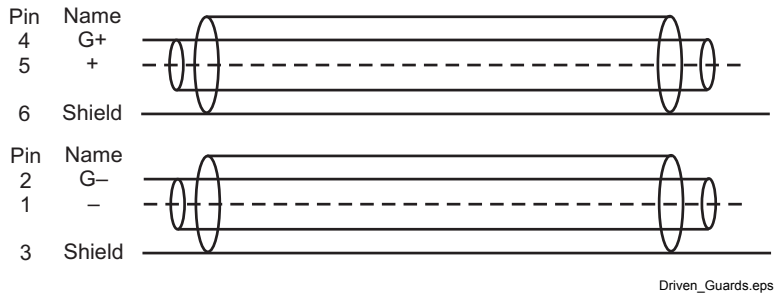

Figure 3-5. Guarded Shielded Cables (Typical for Current and Voltage Leads)

3.4.4 Isolation and Grounding

The Model 370 has two distinct circuit areas that have different grounding needs, the chassis grounded circuits and the isolated measurement circuits. (The control heater output is a third isolated circuit area that should be considered when controlling temperature). Chassis grounded circuits include the instrument chassis, digital control, computer interface and analog voltage outputs. Measurement circuits include the current and voltage leads with their associated guards and shield, the monitor voltage, the reference voltage and scanner control lines. Proper installation of the instrument can enhance the benefits of both isolation and shielding. Improper installation can defeat both. Some trial and error may be required to determine the best configuration. A typical grounding scheme is shown in Figure 3-6.

Chassis grounded circuits should have a low impedance path to Earth ground for both performance and safety. This is achieved by using a 3-conductor power cord in a properly grounded outlet. All instrumentation that is connected to the analog outputs or computer interface (or use Earth ground as measurement common) should have similar low impedance to the same ground. Good grounding of all chassis in a group of instruments prevents voltage differences between their chassis (usually at line frequency) from inducing noise on the measurement. If good quality Earth ground is not available, the chassis of line powered instruments should be strapped together with heavy gauge copper wire or ground strap. Signal leads in communication cables should not be relied on for ground strapping.

Measurement circuits should be as well isolated from Earth ground as possible with one important exception. Measurement leads outside the Dewar should be shielded and in general protected from contact with Earth ground. Inside, care must be taken to prevent electrical shorts between leads and conductive parts of the cooling system. During installation it is important to check for these shorts as well as shorts between the leads themselves. Guards should be terminated at the instrument end of cables only and not at the resistor end. Monitor and reference voltage outputs and scanner control lines should be treated like part of the measurement and connected to isolated or differential measurement inputs. The only unanswered question is: Where should cable shields be terminated?

Shield termination is the exception to the rule that isolated measurement circuits should be isolated from Earth ground. In an ideal installation the shield of the instrument can be joined with the natural shielding of a metal test Dewar to shield all internal measurement leads from external noise. (Obviously this will not shield noise generated within the Dewar.) In many installations the best noise performance of the Model 370 can be achieved when the cable shield is tied directly to the Dewar or other large conductive mass surrounding the experimental space. The problem is that most test Dewars are connected to Earth ground either directly or through the many vacuum and transfer lines running in and out. It would be very difficult to isolate a Dewar that was not specifically designed that way, therefore, the isolation of the instrument must be relied upon to prevent ground loops in this configuration. When the cable shield is connected to a Dewar and therefore Earth ground, that should be the **only** connection between the measurement circuits and Earth.

Isolation and Grounding (Continued)

Any additional connection between measurement circuits and ground will defeat the isolation built into the Model 370 and allow ground loops to form. In the unusual circumstance that one measurement lead is shorted to the cable shield (measurement common) the Model 370 can still make resistance measurements but the active CMR feature must be turned off.

3.4.5 Dressing Cables

Cable dressing is often overlooked in crowded laboratories but even neatness can matter when making small signal measurements. Consider the following ideas for long cable runs outside of the experimental Dewar. Cables with signals sharing the same ground or common should be routed together to reduce ground loop area. Cables with signals that differ in ground or signal size should be routed separately to reduce induced noise. Cables should be kept away from noise generators like fluorescent lights and vacuum pump motors. Cables should be supported to minimize stress on connectors and terminations. Cable support should also limit movement and vibration of the cables during measurements because cable motion can generate electrical noise.

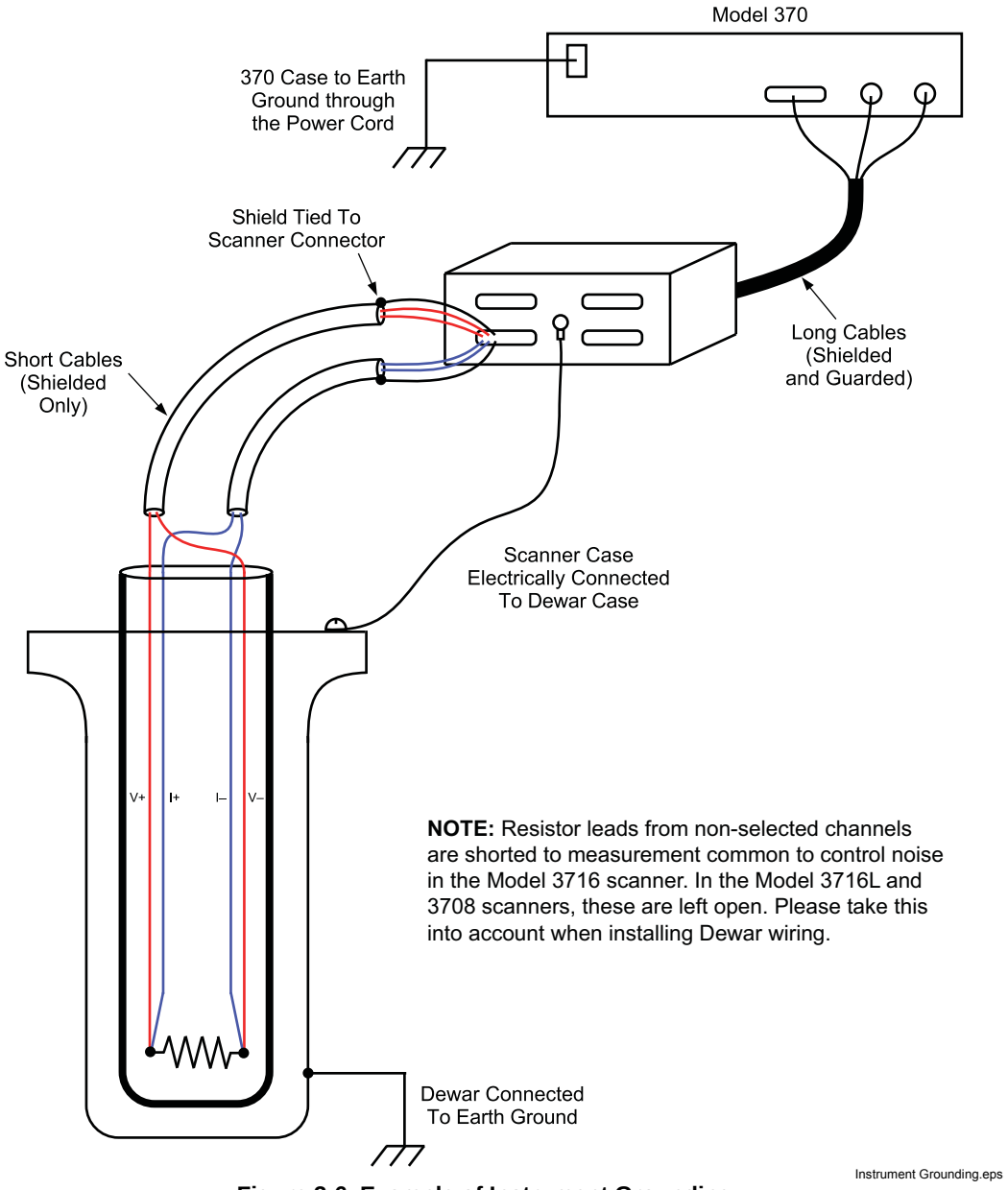

Figure 3-6. Example of Instrument Grounding

3.4.6 Temperature Sensors

Temperature sensors should be treated as any other resistor being measured. One difference is that four lead devices are normally calibrated with a specific arrangement of current and voltage leads. Follow all manufacturer recommendations on installation including lead arrangement or errors in temperature measurement will result.

3.5 OPTIONAL SCANNER INSTALLATION

The Model 3716/L and 3708 Scanners expands the input capability of the Model 370 and increase the number of input channels to 16 (3716/L) or 8 (3708). It is an extension of the isolated measurement circuitry of the Model 370 so its installation should follow the guidelines described in Paragraph 3.4 as well as this paragraph. Cables between the scanner and Dewar should be as short as possible because they carry the smallest signals. Cables between the scanner and instruments can be longer.

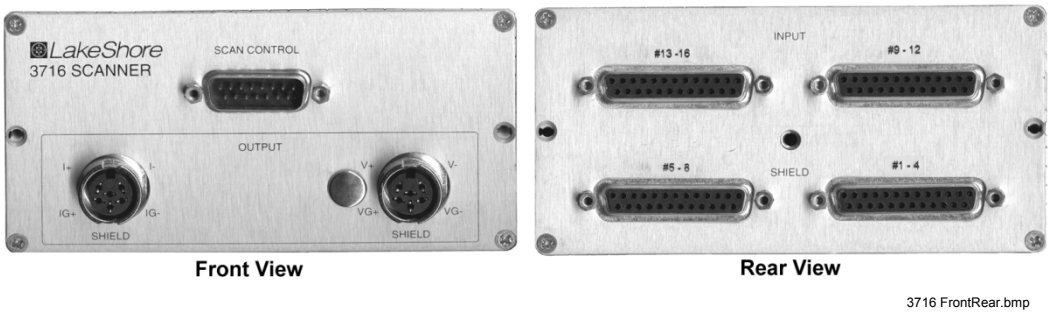

Figure 3-7. Model 3716 Scanner Front and Rear Panels

3.5.1 Grounding the Scanner

It is important to note that the enclosure of the Model 3716/L and 3708 is connected to the input cable shield and therefore tied to measurement common (not the chassis) of the Model 370. In most installations the shield screw on the enclosure should be ground strapped to the test Dewar creating **the** single connection between measurement circuits and Earth. If a different shield to Earth connection is preferred the scanner enclosure must be electrically insulated from its surroundings.

3.5.2 Scanner Resistor Input Connector Definition

With the Model 3716/L, four 25-pin D subminiature receptacles hold connections for up to sixteen 4-lead resistor inputs in four sets of four. With the 3708, two 25-pin DIN receptacles hold connections for up to eight 4-lead resistor inputs. They mate with 25-pin D subminiature plugs included with the scanner (Lake Shore P/N 106-253). Unused inputs can either be left open or all four measurement pins can be shorted together. Pin connections for Channels 1–4 are shown in Figure 3-8, Channels 5–8, 9–12, and 13–16 are wired the same way.

3.5.3 Scanner Resistor Input Cabling

The cable between scanner and Dewar should be kept as short as possible without causing strain on the cable or connections. See Figure 3-6. Short cables can improve the measurement in several ways. They minimize the potential for induced noise on the smallest voltage signals, limit cable capacitance that cannot be guarded because the guards are not carried through the scanner and reduce the potential for ground loops if shield lines accidentally touch the Dewar.

Individually shielded, twisted pair cable is recommended for wiring the resistor inputs. Cable containing up to 8 shielded pairs of wire is available form electronics distributors so one cable can provide enough wires to connect the four channels of one input connector. If multiple smaller cables are used they should be wrapped together to minimize ground loops. The two current leads of a channel should be twisted and the two voltage leads should be twisted. The input connectors provide several shield pins so that individual shields can be connected separately at the scanner end of the cable.

If the shield screw on the scanner enclosure is strapped the test Dewar, the cable shield can be left unterminated at the Dewar end. If the scanner enclosure is not connected to the Dewar, the shields of the cable should be terminated at the

bulk head connection or other conductive point on the Dewar to provide the single connection between isolated measurement circuitry and the Earth grounded Dewar.

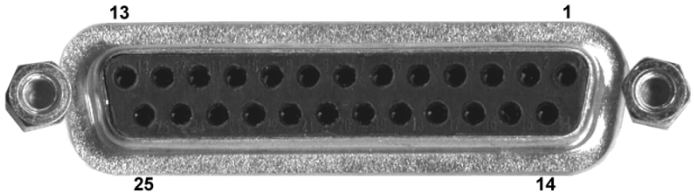

25-Pin Female.bmp

Pin	Name	Pin	Name
1	Shield	14	Shield
2	Shield	15	1 I–
3	1 I+	16	1 V–
4	1 V+	17	Shield
5	Shield	18	2 I–
6	2 I+	19	2 V–
7	2 V+	20	Shield
8	Shield	21	3 I–
9	3 I+	22	3 V–
10	3 V+	23	Shield
11	Shield	24	4 I–
12	4 I+	25	4 V–
13	4 V+		
Body	Shield		

NOTES:

1. Guards are not carried through the scanner
2. Shields are connected to isolated measurement common

Figure 3-8. Scanner Input Connector

3.5.4 Scanner Output Connector Definition

Two 6-pin (240°) Circular DIN 45322 receptacles are used for the resistance measurement output from the scanner. These are identical to the connectors used on the resistance input of the Model 370. The cables included with the scanner are adequate for most installations. Connector pin definition on the scanner is identical to the input connector definition given in Paragraph 3.4.1 in case a cable must be made for a special application. Guard pins are not connected inside the scanner but guards can be carried through the cable making them reversible. Connectors mate with 6-pin Circular DIN plug (Lake Shore P/N G-106-233).

3.5.5 Scanner Output Cabling

A scanner to instrument cable (Lake Shore P/N 112-374) is included with the Model 3716/L and 3708 Scanner. The figure below illustrates the cable wiring. This configuration is recommended when making cables for the scanner. Shielded twisted pair, as described in Paragraph 3.4.3, can be used instead of dual triax for less demanding applications. Cable shields should always be tied to connector shield pins on both ends of this cable.

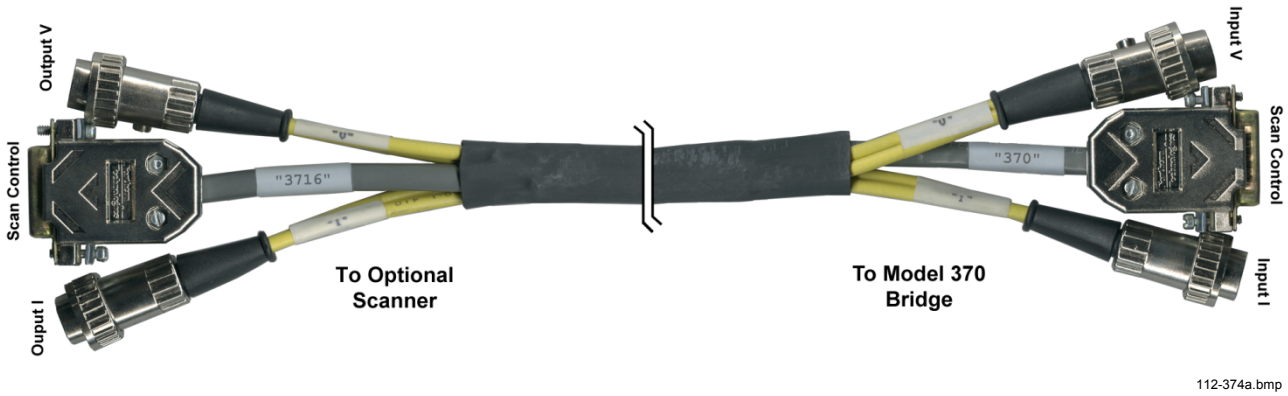

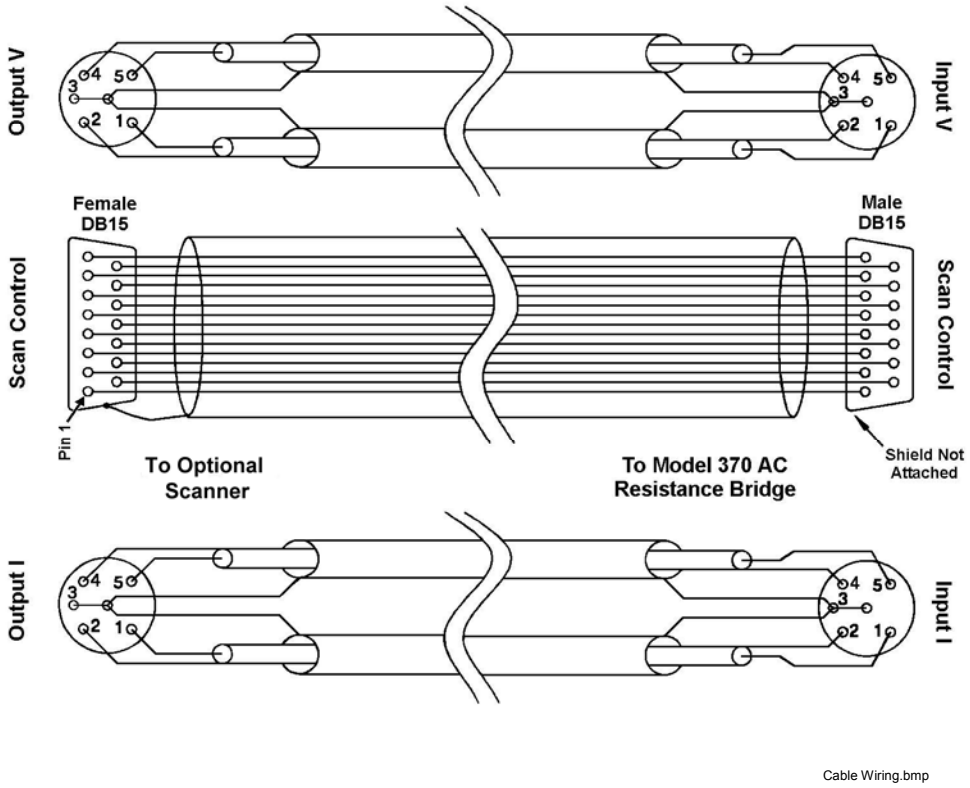

Figure 3-9. Scanner to Instrument Measurement Cable

3.5.6 Scanner Control Connector Definition

A 15-pin D subminiature plug provides power supply and digital control input connections to the Model 3716/L and 3708 Scanner. The scanner control cable included with the scanner is adequate for most installations. A connector pin definition is provided in case a cable must be made for a special application. Both instrument and scanner have the same pin numbering but the instrument has a connector **receptacle** and scanner a connector **plug**.

Scan Control.bmp

Pin	Name	Description
1	Scan Present	Signal to Model 370 that a scanner is installed
2	Digital Common	Common or ground for digital control signals
3	Digital Common	
4	Unused	
5	Analog Common	Common or ground for analog signals
6	Analog Common	
7	Analog Common	
8	–15 V	–15 V referenced to scanner analog common
9	Scan 1	Scan channel select line 1
10	Scan 2	Scan channel select line 2
11	Scan 3	Scan channel select line 3
12	Scan 4	Scan channel select line 4
13	Scan Gain	Selects scanner gain of 1 or 100
14	+5 V	+5 V referenced to scanner digital common
15	+15 V	+15 V referenced to scanner analog common
Body	Chassis	(Do Not Use)

NOTES:

1. Both scanner analog and scanner digital common are tied to isolated measurement circuits inside the instrument and must remain isolated from the instrument chassis and Earth ground.
2. The connector body should not be used for shielding the scan control cable because the chassis of the instrument is at Earth ground and the chassis of the scanner is at isolated measurement common.

Figure 3-10. Scanner SCAN CONTROL Connector

3.5.7 Scanner Control Cabling

A scanner control cable is included with the Model 3716/L and 3708 Scanner. Commercial 15-pin extension cables should **not** be used because the shield is tied to the body of the connector that is at chassis ground on the instrument. Longer cables can be constructed with shield tied to scanner analog common. The cable must have one connector plug end to mate with the instrument and one connector receptacle end to mate with the scanner.

3.5.8 Using the Scan Control Signals Without A Scanner

If an optional scanner is not installed, some of the scan control lines are available for other uses. These signals remain part of the isolated measurement circuitry and should be treated like part of the resistance measurement. They should only be used to drive isolated or differential inputs. Scan channel select lines can be controlled by the computer interface command **DOUT**. The power supplies can also be used but external circuits must guarantee that current is limited or performance of the instrument may be degraded.

Scan Control.bmp

Pin	Name	Description	Pin	Name	Description
2	Digital Common	Common or ground +5 V	10	Scan 2	TTL Digital Output 2
3	Digital Common		11	Scan 3	TTL Digital Output 3
5	Analog Common	Common or ground for ±15 V	12	Scan 4	TTL Digital Output 4
6	Analog Common		13	Scan Gain	TTL Digital Output 5
7	Analog Common		14	+5 V	+5 V @ 50 mA
8	–15 V	–15 V @25 mA	15	+15 V	+15 V @ 25 mA
9	Scan 1	TTL Digital Output 1			

Figure 3-11. SCAN CONTROL Signals Without A Scanner

3.5.9 Scanner Mounting Bracket

A scanner mounting bracket is included with the Model 3716/L and 3708 Scanners so that it can be mounted on or very near the test Dewar. Rigidly mounting the scanner will prevent unnecessary cable movement and help maintain a uniform shield connection over time. The hole pattern for the bracket is shown below but the bracket is made of soft aluminum and additional holes can be added easily. No mounting screws are included.

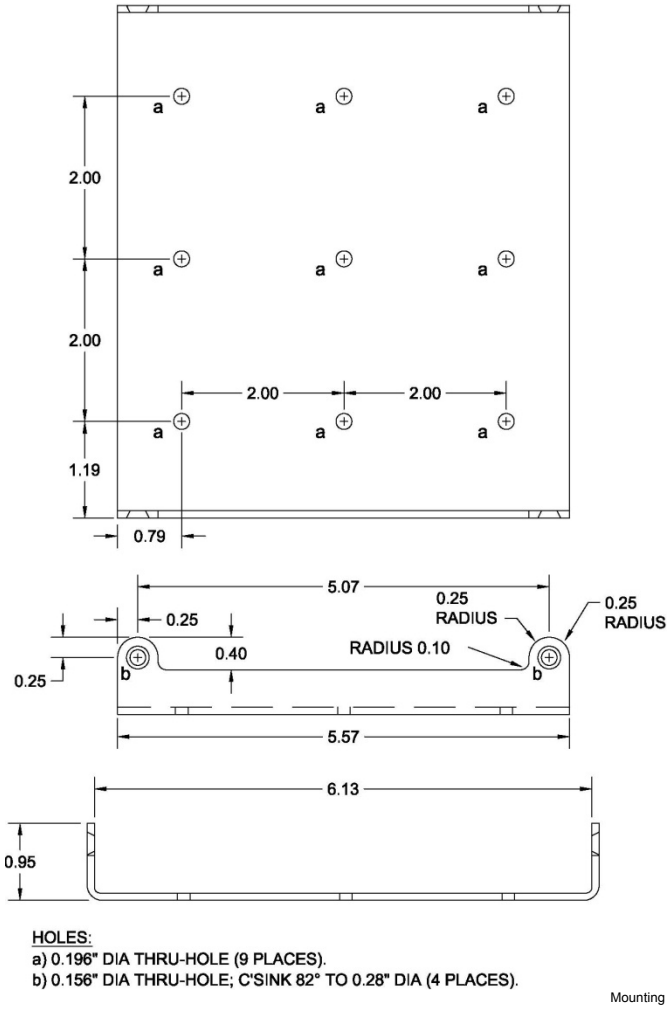

Mounting Bracket.bmp

Figure 3-12. Scanner Mounting Bracket Footprint

3.6 MONITOR AND REFERENCE OUTPUTS

The monitor and reference voltage outputs are included to aid in troubleshooting especially identification of ground loops and other noise sources during instrument installation. Both signal outputs and their common connections are part of the isolated measurement circuitry and should be treated like part of the resistance measurement. They should only be used to drive isolated or differential inputs. Please note that most line powered oscilloscopes are Earth ground referenced and can create the exact problems that they are being used to diagnose.

MonitorRefOutputs.bmp

Figure 3-13. Monitor and Reference Connectors

3.6.1 Monitor Voltage Output

BNC receptacle provides connections for Monitor Voltage Output. Signal is carried on the center conductor and isolated measurement common is on the outer conductor. The signal can be switched internally to one of several diagnostic voltage test points. It has a maximum voltage range of ±15 V and should be used to source no more than 1 mA of current. Mating connector is not included.

3.6.2 Reference Voltage Output

BNC receptacle provides connections for Frequency Reference Output. Signal is carried on the center conductor and isolated measurement common is on the outer conductor. The signal is a TTL level digital voltage synchronized to the measurement frequency that can be used for synchronous (lock-in) detection of AC measurement signals. The output maintains TTL logic voltage levels when driving no more than 2 TTL loads. Mating connector is not included.

3.7 CONTROL HEATER OUTPUT

The temperature control heater output is a controlled DC current source capable of generating a maximum of 1 W of power into a resistive heater that is attached to the cooled load. During control the heater output is adjusted, either manually or through a closed loop PID control algorithm, to balance the continuous cooling power of the refrigeration system and maintain steady load temperature.

Heater Output.bmp

Figure 3-14. Control Heater Output Connector

3.7.1 Heater Output Isolation

Heater output circuitry is independently isolated from both chassis ground and measurement circuits. Isolation is intended to reduce noise from coupling into the heater output from digital circuits inside the instrument and to eliminate ground loop problems. The heater output should not be left completely floating during operation. Similar to the isolated measurement circuit shied, the heater common should be connected to the test Dewar at a single point. Other noise reduction techniques used for the resistor input apply to the heater as well.

3.7.2 Heater Output Connection

BNC receptacle provides connections for the temperature control Heater Output. Signal is carried on the center conductor and isolated heater output measurement common is on the outer conductor. The heater output has a maximum voltage of ±10 V and can source 100 mA. Mating connector not included.

3.7.3 Heater Output Cabling

Coaxial cable is recommended for the heater output, outside of the test Dewar. The center conductor should be large enough to carry the maximum 100 mA current to prevent accidental burn out of the conductor. The outer conductor, heater output common, should be terminated at the bulk head connection or other conductive point on the Dewar to provide the single connection between isolated heater output circuitry and the Earth grounded Dewar.

3.7.4 Calculating Control Heater Power

The control heater output current source on the Model 370 has eight ranges scaled in approximate one-third steps. Each range will source one-tenth the power of the next largest range with the highest range being 1 W. The current source voltage compliance is 10 V and limits the heater resistance to 100 Ω when operating at full power. The restriction on heater resistance is not as severe on lower power ranges and higher heater resistance is often preferred. Heater output can be displayed either as percent of full scale current for a range or as power in watts. Power calculation requires an accurate heater resistance be entered into the instrument.

Some examples of heater resistance and output range are given in Table 3-1. Maximum power for a range is the lower of the two $\mathbf{P = I^2R}$ and $\mathbf{P = V^2/R}$ where P is heater power in watts, I is the maximum current for the range and V is the compliance voltage of 10 V. Heater output resolution is lost any time the compliance voltage limits power.

If a permanently installed heater has a very high resistance value, a resistor may have to be put in parallel with it on the outside of the Dewar to increase the number of useful output ranges and maintain good control resolution.

Table 3-1. Heater Resistance

		Heater Resistance			
		10 Ω	100 Ω	1000 Ω	5000 Ω
Output Range	100 mA	100 mW	1 W*	100 mW†	20 mW†
	31.6 mA	10 mW	100 mW	100 mW†	20 mW†
	10 mA	1 mW	10 mW	100 mW	20 mW†
	3.16 mA	100 µW	1 mW	10 mW	20 mW†
	1 mA	10 µW	100 µW	1 mW	5 mW
	316 µA	1 µW	10µW	100 µW	500 µW
	100 µA	100 nW	1 µW	10 µW	50 µW
	31.6 µA	10 nW	100 nW	1 µW	5 µW

* Indicates maximum power range and resistance

† Indicates power limited by compliance voltage

3.7.5 Heater Output Protection

The heater output hardware is internally protected against open circuit and short circuit conditions. The output should never be connected to an external power source. There are additional firmware features in the Model 370 to help prevent damage to the load. The heater will automatically turn itself off if an open circuit condition is detected. The instrument will not allow the control setpoint to be larger than the setpoint temperature limit stored with the temperature response curve. The heater range can be limited so it is not accidentally set too high from the front panel.

3.7.6 Boosting Heater Power Above 1W

An external power supply can be used to boost the power output of a Model 370 if a temperature control application requires more than the 1 W of heater power. The control heater output can be used to program a voltage programmable DC power supply of almost any size. A resistor must be placed across the heater output to convert the output current into a programming voltage. An appropriate resistor value can be calculated as **R = V/I** where R is the resistor value in ohms, V is the full scale programming input voltage of the power supply and I is the full scale current in amps of the control heater output range. For example if the supply requires a 0 to 10 V programming input a 100 Ω resistor is required for the 100 mA (0.1 A) heater output range 100 Ω = 10 V/0.1 A. The resistor must be rated for the power dissipated in it, **P = VI**, which would be 1 W. Lower heater output ranges can be used to lower the power dissipated in the programming resistor. The maximum output current of 100 mA and the maximum compliance voltage of 10 V cannot be exceeded in this configuration. The analog voltage outputs can be used to directly control a programmable DC power supply in open loop control mode but the closed loop algorithm is not available for those outputs.

3.8 ANALOG OUTPUT AND STILL HEATER OUTPUT

The Model 370 has two analog voltage outputs. They have the same hardware configuration but Analog Output 2 has additional firmware features that make it more useful as a still heater output for a dilution refrigerator. Both signal outputs are referenced to their common that is internally tied to chassis ground.

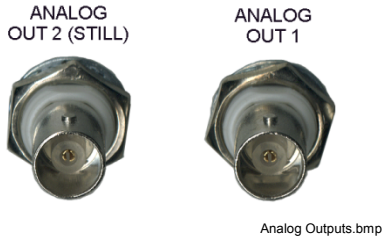

Figure 3-15. Analog Output Connectors

3.8.1 Analog Output Connections

Two, BNC receptacles provides connections for Analog Voltage Output 1 and 2 with ±10 V range, 100 mA maximum current into a 100 Ω resistor. Signal is carried on the center conductor and common is on the outer conductor. The outputs are short circuit protected to prevent them from being damaged but operation into a resistance of less than 100 Ω is not recommended. Mating connector not included.

3.8.2 Calculating Still Heater Power

The heating power sourced by an analog output can be calculated as $\mathbf{P = V^2/R}$ where P is power in watts, V is the output in volts and R is the heater resistance in ohms. Output voltage ranges from 0 to 10 V and is capable of driving a resistance of 100 Ω or greater. The maximum power output of 0 to 1 W can be achieved with a 100 Ω heater. Most stills do not require the maximum power. Using a larger resistor will reduce the range of power and improve setting resolution. For example a 1000 Ω resistor will produce a 0 to 100 mW power range with full setting resolution. If a small resistive heater is permanently installed in the cooling system, lower power can be created by adding a series resistor in a heater lead outside the Dewar.

3.8.3 Calculating Still Heater Current

The current sourced by an analog output can be calculated as **I = V/R** where I is current in amps, V is the output in volts and R is the heater resistance in ohms. Output voltage ranges from 0 to 10 V and is capable of driving a resistance of 100 Ω or greater. The maximum current output of 0 to 100 mA can be achieved with a 100 Ω heater. Most stills do not require the maximum current. Using a larger resistor will reduce the full scale current and maintain good setting resolution. For example a 1000 Ω resistor will produce a 0 to 10 mA current range with full setting resolution. If a small resistive heater is permanently installed in the cooling system, lower current can be created by adding a series resistor in a heater lead outside the Dewar.

3.9 RELAY CONNECTION

The Model 370 has two relays normally associated with the high and low alarm features. Each relay has a normally open (NO), common (COM) and normally closed (NC) contact for a total of 6. All of these connections are electrically isolated from all other circuits in the Model 370. The relay is in its normal state when it is Off and in its active state when it is On. When power to the instrument is turned off, the relay stays in the normal state.

A detachable terminal block provides alarm relay connections which are rated at 30V DC, 5A. The mate is a 6 position terminal block included with the instrument (Lake Shore P/N 106-737). The terminal block accepts up to 12 gauge wire but smaller wire is adequate for most applications.

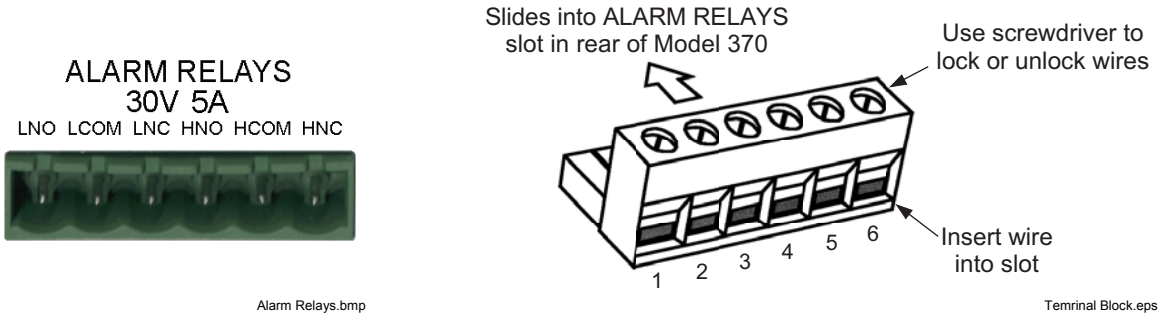

Figure 3-16. Alarm Relays Terminal Block

3.10 RACK MOUNTING

The Model 370 can be installed into a 19-inch rack mount cabinet using the optional Lake Shore Model RM-1 Rack-Mount Kit. The kit contains mounting ears, handles and screws that adapt the front of the instrument to fit into a 3.5 inch tall, full rack space. Additional support may be required in the rear of the instrument and to relieve strain on heavy cables. The mounting ears are painted and do not guarantee good electrical contact between the instrument and cabinet. They should not be used for ground strapping unless paint is removed from under all screws.

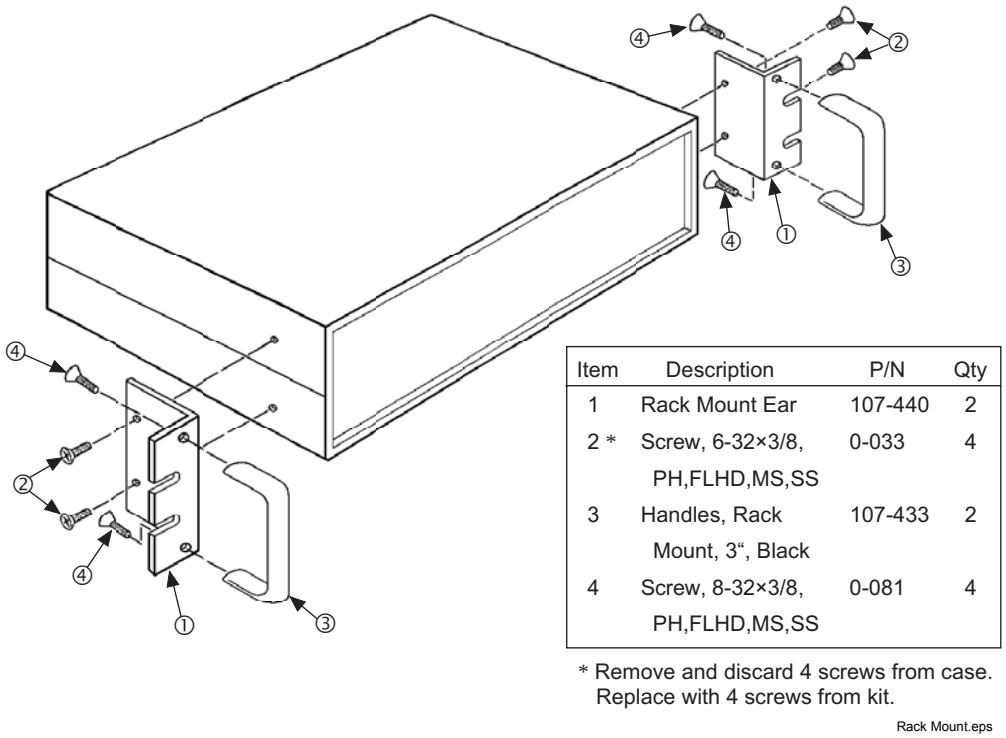

Item	Description	P/N	Qty
1	Rack Mount Ear	107-440	2
2 *	Screw, 6-32×3/8, PH,FLHD,MS,SS	0-033	4
3	Handles, Rack Mount, 3", Black	107-433	2
4	Screw, 8-32×3/8, PH,FLHD,MS,SS	0-081	4

* Remove and discard 4 screws from case. Replace with 4 screws from kit.

Figure 3-17. Model RM-1 Rack Mount Kit Assembly

This Page Intentionally Left Blank

CHAPTER 4

OPERATION

4.0 GENERAL

This chapter provides operating instructions for most features of the Model 370 AC Resistance Bridge. Instructions for the front panel programming features of curve entry and zone entry are in Chapter 5. Computer interface instructions are in Chapter 6.

4.1 TURNING POWER ON

Verify that the AC line voltage indicator in the fuse drawer window shows the appropriate AC line voltage before turning the instrument on. The instrument may be damaged if it is turned on with the wrong voltage selected. Instructions for checking line voltage selection are given in Paragraph 3.3.1.

When the Model 370 is turned on the display shows the Lake Shore logo for a few seconds and the alarm beeper sounds briefly to indicate the instrument is initializing itself. Most of the instrument setup parameter values are retained when power is off with a few exceptions. If the instrument was controlling temperature, the heater output is turned off. All captured Max and Min data is lost. If the resistance reading is set to voltage excitation mode and autorange is on, the instrument will select the lowest excitation current available at power up then select the optimal range. When the instrument is powered on for the first time parameter values are set to their defaults, listed in Table 4-1.

When initialization is complete the instrument will begin its normal reading cycle and resistance or temperature readings should appear on the display. Messages will appear in the reading locations on the display if the measurement input has not been fully configured. Messages listed in Paragraph 8.6, Instrument Hardware, are related to the instrument hardware and may require help from Lake Shore service. The messages listed in Paragraph 8.6, Measurement of Compliance Limit, do not indicate a problem with the instrument and will disappear when input setup is complete. The messages listed in Paragraph 8.6, Illegal Operation, indicate user intervention corresponding to the description of the message in the table.

The Model 370 should be allowed to warm up for a minimum of 30 minutes to achieve rated accuracy.

4.2 DISPLAY DEFINITION

The Model 370 has an 8 line by 40 character vacuum fluorescent (VF) display capable of showing both text and graphic images. This paragraph describes features of the display that appear during normal operation including resistance measurement, temperature measurement, and temperature control. Other display configurations appear during parameter setting and data entry operations. These displays are illustrated in their individual operation paragraphs.

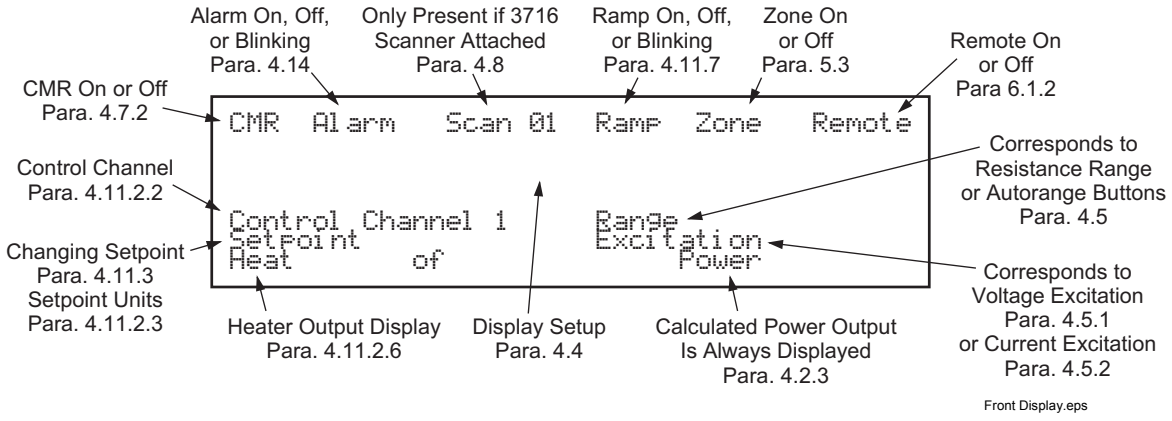

Figure 4-1. Model 370 Display

4.2.1 Reading Display

The measurement reading area includes the second through fifth lines of the display. The user can configure this area to display between 1 and 8 reading locations. One to four readings are displayed with larger 11 × 15 block characters. Five to eight readings are displayed with typical 5 × 7 block characters. Each reading location can be configured with a channel (if a Model 3716 Scanner is installed), data source including resistance measurement, temperature measurement, maximum, minimum or the results of the linear equation. Display setup is described in Paragraph 4.4. The following symbols are used in the reading area.

● or ○	Display update indicator
1–16	Channel indicators for Model 3716 Scanner channels
–	Minus sign indicates improper lead arrangement for resistance measurement
mΩ, Ω, kΩ, MΩ	Resistance in ohms
mK, K	Temperature in Kelvin
Mx	Result of maximum capture
Mn	Result of minimum capture
LN	Result of the linear equation

4.2.2 Display Update Indicator

The display update indicator blinks with 3 distinct patterns to indicate the phases of a measurement cycle. The indicator remains on continuously to indicate hardware settling after a range change. Blinking with on time equal to off time indicates firmware settling including pause and filter settling times. During these first two phases autorange, Max/Min, alarm, analog output and temperature control functions are frozen so they are not affected by transitional data. The display update indicator blinks on 90% and off 10% when the instrument is reporting stable readings and all features are active.

If a Model 3716 Scanner is attached to the Model 370 the channel indicators take the place of the display update indicator. If the active scan channel is chosen for one of the display locations, the channel number blinks while the channel is being read. The blink pattern indicates both range and channel changes.

4.2.3 Range, Excitation and Power

The lower right corner of the display provides feedback from the active resistance measurement and is continually updated for both autorange and scanner operation. The present resistance range is shown first followed by the chosen excitation. Excitation is displayed in volts if voltage mode is active and amps if current mode is active. Excitation power is shown on the bottom display line. Power is continuously calculated using the instruments nominal current source excitation and the resistance measurement after each update. Power from stray noise sources is not included in the calculation.

4.2.4 Display and LED Annunciators

The top line of the display is reserved for feature annunciators that are shown as necessary to indicate the status of enabled features. Display annunciators are not visible when their associated feature is disabled. In addition to the six display annunciators there are four LED annunciators to the right of the display.

Display Annunciators

CMR	Indicated that active common mode reduction is on
Alarm	On steady when the alarm feature is on, blinks when any alarm is active
Scan 16	Indicates scanner is present followed by active scan channel
Ramp	On steady when ramp feature is on, blinks when actively ramping setpoint
Zone	Indicates that zone tuning mode is enabled for closed loop temperature control
Remote	Indicates that the instrument is under remote control of the computer interface

LED Annunciators

Autorange On/Off	On when autorange is on for resistance range
Voltage Mode	On when in voltage excitation mode
Current Mode	On when in current excitation mode
Autoscan On/Off	On when autoscanning scanner channels

4.2.5 Temperature Control Display

The lower left corner of the display provides operator feedback when temperature control is enabled. The top line shows the control channel if a Model 3716 Scanner is attached. The second line shows the control setpoint in resistance or temperature (if a temperature response curve is loaded for the control channel). The third line shows the heater output and range. The heater output can be displayed as either percent of current for the heater output current source range or as power in watts. The user must enter an accurate heater resistance for the power calculation to be meaningful.

4.3 KEYPAD DEFINITION

The Model 370 has 36 keys separated into 3 groups on the instrument front panel. The group of keys closest to the display act directly on the resistance measurement, the center group contains temperature control features and the far right group combines instrument setup and data entry.

4.3.1 Key Descriptions

Autorange On/Off	Turn Autorange on or off for resistance range
Resistance Range ▲▼	Manually increase or decrease resistance range
Voltage Mode	Enable voltage excitation mode
Voltage excitation ▲▼	Increase or decrease voltage excitation
Current Mode	Enable current excitation mode
Current excitation ▲▼	Increase or decrease current excitation
Autoscan On/Off	Turn Autoscan on or off if a scanner is installed
Scanner Channel ▲▼	Manually increment or decrement scanner channel
Zone Setup	Setup temperature control zones for closed loop control
Manual Output	Change open loop control parameter Manual Output
PID	Change closed loop control parameters P, I and D
Setpoint	Change the temperature control setpoint
Control Setup	Setup temperature control and setpoint ramp feature
Still Output	Change the still heater output value
Heater Range	Select a heater current source output range for temperature control
Heater Off	Turn the heater current source output off
Input Setup	Setup parameters related to each input channel
Instrument Setup	Setup instrument parameters common to all channels
Filter	Setup firmware (digital) filter
Max/Min	Select Source for Max/Min data and reset captured values
Display Setup	Setup display (including display units)
Curve Entry	Enter a temperature response curve from the front panel
Linear (ΔR)	Setup linear equation or ΔR
Alarm	Setup alarm feature and reset latched alarms
Local	Returns the instrument to local operation if in remote
Computer Interface	Setup computer interface parameters
Analog Output	Setup analog voltage output and still heater output
Relay Setup	Setup relay feature
0-9, ±, .	Numeric data entry within a setting sequence
Escape	Exits from parameter setting sequence without changing the parameter value, press and hold to reset parameters to default values
▲ (Up)	Increments a parameter selection or value
▼ (Down)	Decrements a parameter selection or value
Enter	Accepts a new parameter value, press and hold to lock keypad

4.3.2 General Keypad Operation

The Model 370 uses three basic keypad operations, direct operation, setting selection and data entry, for the majority of operator interface. A few specialized keypad operations, such as curve entry, are described in the individual operation paragraphs.

Direct Operation: Key functions occur immediately when the key is pressed. **Resistance Range**, **Autorange** and **Scanner Channel** are examples of keys that operate this way.

Setting Selection: Allows the user to select from a finite list of parameter values. During setting selection the ▲ and ▼ keys are used to select a parameter value. **Enter** is used to accept the change and advance to the next parameter. **Escape** will cancel the change to that parameter and return to the normal display. Setting selection screens always include the message: "Select with ▲▼".

Data Entry: Allows the user to enter numeric parameter values using the data entry keys that are printed on the key tops. Data entry keys include numbers from 0 to 9, sign, and decimal point. The labels printed above the keys describe the key function during normal operation. When one of the keys is pressed and a data entry sequence is started, the keys follow the data entry functions printed on the key tops. Once the correct parameter value is entered press **Enter** to accept the change and advance to next parameter. Pressing **Escape** once will clear the new value and restart the setting sequence. Pressing **Escape** again will return to the normal display. Data entry screens always include the message: "Enter a value for".

Related setting selection and data entry sequences are often chained together under a single key. To skip over a parameter without changing its value press **Enter** before pressing an arrow or number key. To return to the normal display in the middle of a setting sequence press **Escape** before pressing an arrow or number key. Changes "entered" before **Escape** is pressed are kept.

4.4 DISPLAY SETUP

The display setup sequence for the Model 370 may seem complicated at first but the steps are necessary to provide flexibility to the operator.

4.4.1 Display Setup and Units Selection

Display setup begins with choosing the number of reading locations on the display. One to four readings are displayed with large characters and five through eight readings are displayed with standard characters. Reading locations are assigned the following numbers:

Display Locations

Location 1	Location 2
Location 3	Location 4
Location 5	Location 6
Location 7	Location 8

If no scanner is installed only a data source must be chosen for each reading location. Choosing units of resistance in ohms or temperature in Kelvin for a live reading is part of the source selection. Units for Max/Min and linear equation are selected during setup of those features. Setting of display resolution follows in the display setup sequence if necessary.

Data Sources

Ohms	Live resistance reading in ohms
Kelvin	Live temperature reading in Kelvin (if curve installed)
Max	Maximum reading captured
Min	Minimum reading captured
Linear	Result of linear equation

If a scanner is installed, both channel and source must be chosen for each reading location. When scanning more that 8 channels, it is not possible to have a reading for all channels on the display at the same time, but one or more of the locations can be assigned to follow the active scan channel. Channel numbers 1 to 16 to indicate the individual scanner channels and the word "Scan" indicates that the display location should follow the active scan channel.

Display Setup and Units Selection (Continued)

To configure the display press **Display Setup**. The first display setup screen appears as a prompt for the number of reading locations.

```
Display Setup

Select With ▲▼

Number Of Locations: 4
```

Use the ▲ or ▼ key to select a number of reading locations between 1 and 8. Press **Enter** to accept the new selection and continue to the next setting screen. Press **Escape** to cancel the new selection and return to the normal display.

The next display setup screen appears as a prompt for the display location number. The channel, source and resolution settings that follow apply to the location selected in this step.

```
Display Setup

Select With ▲▼

Display Location: 1
```

Use the ▲ or ▼ key to select a location between 1 and 8. Press **Enter** to accept the new selection and continue to the next setting screen. Press **Escape** to cancel the new selection and return to the normal display.

If a scanner is attached the channel selection screen will appear to prompt for the input channel that is to appear in the chosen location. If no scanner is attached, the instrument will skip to source selection.

```
Display Setup
Display Location 1

Select With ▲▼

Channel: 1
```

Use the ▲ or ▼ key to select an input channel between 1 and 16. Select "Scan" for the display to follow the active scan channel. Press **Enter** to accept the new selection and continue to the next setting screen. Press **Escape** to cancel the new selection and return to the normal display.

The next display setup screen appears as a prompt for the source of data for the chosen display location. Units for live readings can be chosen from this screen. Units for Max/Min and linear equation are selected during setup of those features.

```
Display Setup
Display Location 1

Select with ▲▼

Data Source: Ohms
```

Use the ▲ or ▼ key to select one of the data sources, ohms, Kelvin, Max, Min, or linear (result of the linear equation). Press **Enter** to accept the new selection and continue to the next setting screen. Press **Escape** to cancel the new selection and return to the normal display.

4.4.2 Display Resolution

Each display location can be assigned a resolution from 4 to 6 digits. The resolution selection only affects the display; readings sent over computer interface are always 6 digits. It is not necessary to change display resolution from the default of 6 digits because that selection gives the maximum resolution available on the instrument. If a resolution of less than 6 is chosen, additional digits are truncated to make measurement noise less distracting.

To change display resolution, continue from the display source screen or press **Display Setup** then **Enter** until the following display setup screen appears as a prompt for display resolution on the chosen display location.

```
Display Setup
Display Location 1

Select With ▲▼

Display Resolution: 6
```

Use the ▲ or ▼ key to select a resolution from 4 to 6. Press **Enter** to accept the new selection and continue to other display features. Press **Escape** to cancel the new selection and return to the normal display.

4.4.3 Display Brightness

The vacuum fluorescent (VF) display on the Model 370 has four brightness settings between 100% and 25% that can be changed from the front panel. The brightness setting changes the entire VF display but does not affect the LED annunciators to the right of the display. Continuous use of the instrument at 100% brightness will reduce the operating life of the display.

None of the brightness settings will turn the display off completely. The instrument will operate with the display unplugged for applications that require absolute darkness but **both** the digital control and power supply cables must be unplugged with the instrument power turned off or damage to the display will result.

To change display brightness, continue from the display resolution screen or press **Display Setup** then **Enter** until the following display setup screen appears as a prompt for display brightness.

```
Display Setup

Select With ▲▼

Brightness: 75 %
```

Use the ▲ or ▼ key to select brightness from 25% to 100%. Press **Enter** to accept the new selection and return to the normal display. Press **Escape** to cancel the new selection and return to the normal display.

4.5 EXCITATION MODES, RESISTANCE RANGE, AND AUTORANGE

The Model 370 uses current source excitation to measure resistance and it can be operated in this mode. The instrument firmware is also able to simulate voltage excitation of the measured resistor to create a second operating mode. Resistance range selection and autorange behave differently when a different excitation mode is selected. These parameter selections can be different for every scanner channel if a scanner is installed. The instrument remembers how each channel is configured and will return to that configuration whenever the channel is chosen. Refer to Paragraph 4.8.4 for instructions on how to change parameter selections for all channels at the same time.

4.5.1 Voltage Excitation Mode

In voltage excitation mode the excitation selection in volts is treated as a not to exceed value. The instrument assigns an excitation current to each resistance range that keeps the measurement voltage is as large as possible without exceeding the selected excitation voltage. Current is changed to accommodate resistance range or voltage excitation parameter changes.

To use voltage excitation mode press the **Voltage Mode** key. The LED annunciator above that key will light to indicate the excitation mode. The excitation display line in the lower right corner of the display will also change to indicate the maximum excitation in volts. Current excitation arrow keys are locked out.

To change the voltage excitation use the **Voltage Excitation ▲▼** keys. Available ranges are listed in Table 1-1. As the table indicates, not every combination of voltage excitation and resistance range is possible. The following messages are displayed in the excitation display to indicate limits.

Maximum	Maximum voltage excitation has already been chosen
Minimum	Minimum voltage excitation has already been chosen
Increase Resistance	Resistance range must be increased before changing voltage excitation
Decrease Resistance	Resistance range must be decreased before changing voltage excitation

Resistance ranges have approximately 20% over range but it is recommended that the range be increased when the reading is at full scale for the range to guarantee enough overhead to account for noise voltages. Better measurement resolution can be achieved by decreasing the resistance range when the reading is below 20% of full scale.

To change the resistance range **Resistance Range ▲▼** keys. Available ranges are listed in Table 1-1. The following messages are displayed to indicate range limits.

Maximum	Maximum resistance range has already been chosen
Minimum	Minimum resistance range has already been chosen
Increase Excitation	Voltage excitation must be increased before changing resistance range
Decrease Excitation	Voltage excitation must be decreased before changing resistance range

The autorange feature allows the instrument to automatically choose an appropriate resistance range. The instrument will increase the resistance range (decrease excitation current) if the measurement reaches full scale. Normally no over range error is created because of the approximate 20% over range capability of the input. Over range errors are possible when resistance changes very quickly or when resistance increases beyond the limit of the voltage excitation selection. The autorange algorithm will not change the excitation setting to accommodate larger resistances. The instrument will decrease the resistance range (increase excitation current) if the measurement drops below 20% of full scale. Autorange is not recommended when resistance changes are very fast, measurements are very noisy or when data acquisition cannot tolerate a range change delay in the middle of a data set.

To turn autorange on or off press the **Autorange** key. The LED annunciator above the key lights to indicate autorange is on.

4.5.2 Current Excitation Mode

In current excitation mode one of the instrument current source selections is chosen directly as excitation. Gain of the measurement input is changed to accommodate different resistance ranges.

To use current excitation mode press the **Current Mode** key. The LED annunciator above that key will light to indicate the excitation mode. The excitation display line in the lower right corner of the display will also change to indicate the current excitation in amps. Voltage excitation arrow keys are locked out.

Current Excitation Mode (Continued)

To change the current excitation use the **Current Excitation ▲▼** keys. Available ranges are listed in Table 1-1. As the range table indicates, not every combination of current excitation and resistance range is possible. The following messages are displayed in the excitation display to indicate limits.

Maximum	Maximum current excitation has already been chosen
Minimum	Minimum current excitation has already been chosen
Decrease Resistance	Resistance range must be decreased before changing current excitation
Increase Resistance	Resistance range must be increased before changing current excitation

Resistance ranges have approximately 20% over range but it is recommended that the range be increased when the reading is at full scale for the range to guarantee enough overhead to account for noise voltages. Better measurement resolution can be achieved by decreasing the resistance range when the reading is below 20% of full scale.

To change the resistance range **Resistance Range ▲▼** keys. The following messages are displayed to indicate range limits.

Maximum	Maximum resistance range has already been chosen
Minimum	Minimum resistance range has already been chosen
Decrease Excitation	Current excitation must be decreased before changing resistance range
Increase Excitation	Current excitation must be increased before changing resistance range

The autorange feature allows the instrument to automatically choose an appropriate resistance range. The instrument will increase the resistance range (decrease input gain) if the measurement reaches full scale. Normally no over range error is created because of the approximate 20% over range capability of the input. Over range errors are possible when resistance changes very quickly or when resistance increases beyond the limit of the current excitation selection. The autorange algorithm will not change the excitation setting to accommodate larger resistances. The instrument will decrease the resistance range (increase input gain) if the measurement drops below 20% of full scale. Autorange is not recommended when resistance changes are very fast, measurements are very noisy or when data acquisition cannot tolerate a range change delay in the middle of a data set.

To turn autorange on or off press the **Autorange** key. The LED annunciator above the key lights to indicate autorange is on.

4.5.3 Turning Excitation Off

The Model 370 offers many excitation levels with the lowest being very low in power. It is still sometimes necessary to turn excitation off. Excitation should be turned off any time the current source leads are open circuited and then attached to a cold resistor with the instrument turned on. This condition may occur when the input is scanned or multiplexed externally. Excitation is turned off automatically for channel changes when the Model 3716 Scanner is being used.

When excitation is turned off, the instrument sets its current source to the lowest output possible and then shunts across the output with a mechanical relay. The relay provides a low resistance path for any remaining leakage current and prevents the current source from climbing to its compliance voltage. When excitation is turned back on, the process is reversed to prevent transients from heating the measured resistor.

To turn excitation off press the **Voltage Mode** and **Current Mode** keys at the same time for one second. Both excitation mode LED annunciators will turn off and the excitation display location will show Off.

To restore excitation press any of the range or excitation keys. The first key press will return the instrument to its previous excitation without making a change.

4.6 INPUT SETUP

There are several parameters besides resistance range and excitation that directly affect the measurement input. The parameters grouped under **Input Setup** are specific to individual scanner channels if a scanner is installed. Channel selection, scan pause time and channel enable are skipped if a scanner is not installed. Change pause and curve or temperature coefficient should be set even if the Model 370 is configured for only one channel. The parameters grouped under **Instrument Setup** (Paragraph 4.7) apply to all channels whether or not a scanner is installed.

4.6.1 Channel Selection

To begin input setup press the **Input Setup** key. If a scanner is installed, the first input setup screen appears as a prompt for the channel number. All of the parameter changes that follow will act on the selected channel. If no scanner is installed, the sequence will begin below with change pause.

```
Input Setup

Select With ▲▼

Channel: 1
```

Use the ▲ or ▼ key to select a channel number between 1 and 16. Choose the selection "All" and the changes will be applied to all channels at the same time. Press **Enter** to accept the new selection and continue to the next setting screen. Press **Escape** to cancel the new selection and return to the normal display.

4.6.2 Scanner Dwell Time

The scanner dwell time parameter allows the user to select how long the measurement will dwell on any channel when the Autoscan feature is on. Each channel can have a different dwell time from 1 to 200 seconds. Scan dwell time begins after both the change pause time and firmware filter is settled. Dwell time will be interrupted if temperature control and Autoscan are active at the same time.

The next input setup screen appears as a prompt for the scanner dwell time.

```
Input Setup
Channel  1

Enter A Value For

Scan Dwell Time:  10  s
```

Use the data entry keys to enter a dwell time between 1 and 200 seconds. Press **Enter** to accept the new selection and continue to the next setting screen. Press **Escape** to restart the setting sequence and enter a new value. Press **Escape** again to cancel the sequence and return to the normal display.

4.6.3 Change Pause Time

The input change pause parameter allows the user to select how long the instrument waits after a resistance range or channel change before it begins using readings for autorange, Max/Min, alarm, analog output and temperature control functions. The default of 3 seconds is recommended for typical applications but the pause time should be increased for large resistances or very low excitations.

The next input setup screen appears as a prompt for the change pause time.

```
Input Setup
Channel  1

Enter A Value For

Change Pause Time:   3  s
```

Use the data entry keys to enter a pause time between 3 and 200 seconds. Press **Enter** to accept the new selection and continue to the next setting screen. Press **Escape** to restart the setting sequence and enter a new value. Press **Escape** again to cancel the sequence and return to the normal display.

4.6.4 Selecting a Temperature Response Curve

If the Model 370 is being used to read resistive temperature detectors (RTDs), a temperature response curve can be entered into the instrument so that it can calculate and display temperature as well as measured resistance. This paragraph instructs how to select a curve that is already installed in the instrument. Refer to Paragraph 5.2.1 for information on how to enter curves into the Model 370. If a curve is selected for a channel, the temperature coefficient (used for temperature control) is taken from that curve and the temperature coefficient parameter below is ignored. "No Curve" can be selected for any channel that is not used for temperature readings.

The next input setup screen appears as a prompt for the curve number. Curve name and serial number follow for reference.

```
Input Setup
Channel  1

Select With ▲▼

Curve Number: 1
User Curve 01     0123456789
```

Use the ▲ or ▼ key to select a curve number between one and twenty or "No Curve". Only the numbers for curves loaded in the instrument will appear in the selection sequence. Press **Enter** to accept the new selection and continue to the next setting screen. Press **Escape** to cancel the new selection and return to the normal display.

4.6.5 Temperature Coefficient

If an RTD is used for temperature control and does not have a temperature response curve the user must indicate the temperature coefficient of the device so that the control equation can be calculated correctly. This setting sequence will be skipped if a curve is selected for a channel. Platinum and Rhodium Iron RTDs are positive temperature coefficient and most thermistors and semiconductor RTDs like Cernox and Germanium are negative temperature coefficient.

The next input setup screen appears as a prompt for a temperature coefficient.

```
Input Setup
Channel  1

Select With ▲▼

Temperature Coefficient: Negative
```

Use the ▲ or ▼ key to select a coefficient of positive and negative. Press **Enter** to accept the new selection and continue to the next setting screen. Press **Escape** to cancel the new selection and return to the normal display.

4.6.6 Turning A Channel On or Off

If a scanner is installed and not all 16 channels are being used, some of the scanner channels can be disabled. Disabling a channel does not change any of the measurement hardware but it does allow the firmware to skip the channel in keypad entry sequences and streamline operation. This sequence will be skipped if there is no scanner attached. The instrument will not allow all channels to be turned off at the same time and will turn on channel 1 as a default.

The next input setup screen appears as a prompt for channel On/Off.

```
Input Setup
Channel  1

Select With ▲▼

Channel: On
```

Use the ▲ or ▼ key to select channel on or off. Press **Enter** to accept the new selection and return to the normal display. Press **Escape** to cancel the new selection and return to the normal display.

4.7 INSTRUMENT SETUP

The input parameters grouped under **Instrument Setup** apply to all input channels whether or not a scanner is installed. The other parameters included in this paragraph do not belong anywhere else so they ended up here.

4.7.1 Frequency Selection

The Model 370 AC resistance measurement runs at a nominal excitation frequency of 13.7 Hz. This frequency was chosen so that it and its harmonics are separated from both 50 Hz and 60 Hz line frequency. It was also chosen to balance the effects of settling time and cable capacitance. All specifications including resolution and filter settling are given at 13.7 Hz excitation frequency. It may be necessary to change the frequency to avoid interaction between this instrument and other measurements. This is sometimes necessary when two or more bridges are used in the same system. The Model 370 offers two alternate nominal frequencies of 9.8 and 16.2 Hz. Frequency can be changed through firmware without turning the instrument off. The measurement must be allowed to settle before new readings are valid.

To begin instrument setup press the **Instrument Setup** key. The first instrument setup screen appears as a prompt for the excitation frequency.

```
Instrument Setup

Select With ▲▼
Frequency: 13.7 Hz
```

Use the ▲ or ▼ key to select one of the three excitation frequencies. Press **Enter** to accept the new selection and continue to the next setting screen. Press **Escape** to cancel the new selection and return to the normal display.

4.7.2 Active Common Mode Reduction

Active common mode reduction is a special feature of the Model 370 that can reduce noise on measurement leads. It is most useful when excitation current is 1 µA or greater but should be left on unless one resistor lead is shorted to measurement common, refer to Paragraph 3.4.

The next instrument setup screen appears as a prompt for active common mode reduction On/Off.

```
Instrument Setup

Select With ▲▼
Common Mode Reduction: On
```

Use the ▲ or ▼ key to select active common mode reduction on or off. Press **Enter** to accept the new selection and continue to the next setting screen. Press **Escape** to cancel the new selection and return to the normal display.

4.7.3 Guard Drive

Driven guards reduce the effect of cable capacitance on the resistance measurement. Cable capacitance is normally not large enough to cause a measurable effect until the measured resistor is 100 kΩ or greater. Guards should be turned off when measuring lower resistances. When guards are turned off they remain at measurement common potential. Guards are not a substitute for appropriate cable shielding.

The next instrument setup screen appears as a prompt for guard drive On/Off.

```
Instrument Setup

Select With ▲▼
Guard Drive: On
```

Use the ▲ or ▼ key to select guard drive on or off. Press **Enter** to accept the new selection and continue to the next setting screen. Press **Escape** to cancel the new selection and return to the normal display.

4.7.4 Monitor Output Selection

The monitor output on the Model 370 is a tool to help the user diagnose measurement problems. The output can be set to monitor test voltages from several points inside the instrument. The monitor voltages are often used with the reference output. An explanation of these voltage is given with other troubleshooting information in Paragraph 8.7.

Monitor Output Voltages

Off	Output grounded to measurement common
CS NEG	AC voltage driving negative side of current source programming resistor
CS POS	AC voltage driving positive side of current source programming resistor
VAD	DC voltage into the AD converter
VCM NEG	AC voltage on the negative side of the differential input amplifier
VCM POS	AC voltage on the positive side of the differential input amplifier
VDIF	AC voltage output of the differential input amplifier
VMIX	Conditioned AC input voltage at input of the product detector

The next instrument setup screen appears as a prompt for the monitor output voltage setting.

```
Instrument Setup

Select With ▲▼
Monitor Output: VDIF
```

Use the ▲ or ▼ key to select one of the monitor output voltages. Press **Enter** to accept the new selection and continue to the next setting screen. Press **Escape** to cancel the new selection and return to the normal display.

4.7.5 Range and Excitation Keys for One or All Channels

When a scanner is attached, the range and excitation keys are normally used to change parameters for the active scanner channel. If all of the resistors connected to the scanner are the same, it is convenient for these changes to affect all channels at the same time. The Model 370 allows the user to configure the range and excitation keys to change one channel at a time or all channels at once. Similar operation is available for input parameters under the **Input Setup** key by selecting the channel designator "All".

The next instrument setup screen appears as a prompt for the input change keys setting.

```
Instrument Setup

Select With ▲▼
Input Change Keys: One
```

Use the ▲ or ▼ key to select an input change keys setting of One or All. Press **Enter** to accept the new selection and return to the normal display. Press **Escape** to cancel the new selection and return to the normal display.

4.8 OPTIONAL SCANNER OPERATION

The Model 370 automatically identifies the Model 3716/L or 3708 Scanner when it is powered up with the scanner attached. It is easy to tell if the instrument has recognized the scanner because the word "Scan" and the active channel number appear on the top line of the display. When the scanner is attached operation related to the resistance measurement input changes slightly. This paragraph summarizes scanner operation although most of the operation is addressed in the individual feature paragraphs.

4.8.1 Channel On or Off

If any of the 16 scanner channels are skipped during channel selection or other selection operations those channels may have been turned off. To turn on the channels refer to Paragraph 4.6.6.

4.8.2 Manual Scanner Channel Selection

To change the active scanner channel manually use the **Scan Channel ▲▼** keys. The new channel number will appear on the top display line immediately but it can take several seconds for a valid reading to appear on the display. The first valid reading will be ready after the hardware settling time, change pause time and filter settling. The hardware settling time is fixed but the change pause (Paragraph 4.6.3) and the filter settling time (Paragraph 4.9) can be set by the user. If the instrument is used to control temperature and scan channels at the same time, the control algorithm can periodically override the scan channel.

4.8.3 Automatic Scanning

The Model 370 has an autoscan feature that will sequence through all enabled scanner channels. In addition to setting an appropriate change pause time and filter time constant, the user must set the scan dwell time for each channel as described in Paragraph 4.6.2. The scan dwell time is the length of time the instrument will take valid readings on the active channel before moving on to the next channel. The scan dwell time takes place after the hardware settling time, change pause time and filter settling. If the instrument is used to control temperature and autoscan at the same time, the control algorithm will override the autoscan dwell times.

To turn on the autoscan feature press the **Autoscan** key. The LED annunciator above that key will light to indicate autoscan is on. To turn off the autoscan feature press the **Autoscan** key again.

4.8.4 Settings for Multiple Channels

Most often parameters related to the measurement input are changed for the active scanner channel only. If all of the resistors connected to the scanner are the same, it is convenient for these changes to affect all channels at the same time. The Model 370 also allows the user to make changes to the input parameters for all channels. All channels can be selected for parameters under the **Input Setup** key by selecting the channel designator "All". Paragraph 4.7.5 describes how to configure the range and excitation keys to change all channels.

4.9 FIRMWARE FILTER

The firmware filter is an integral part of the Model 370 resistance measurement. It is directly related to measurement resolution and frequency response. The instrument takes A/D readings 10 times per second no matter how the filter configured. The filter algorithm takes a running, linear average of from 10 to 2000 readings depending on settling time value. New filtered reading is available over the interface ten times a second and displayed at the normal display update rate. The linear average filter gives faster settling time than other filter methods but its frequency response is not well behaved. The characteristics of the filter should be well understood before attempting to track periodic changes in resistance with filtered readings.

To begin filter setup press the **Filter** key. If a scanner is installed, the first filter setup screen appears as a prompt for the channel number. All of the parameter changes that follow will act on the selected channel. If no scanner is installed, the sequence will begin below with filter On/Off.

```
Filter Setup

Select With ▲▼
Channel: 1
```

Use the ▲ or ▼ key to select a channel number between 1 and 16. If you choose the selection "All," changes will be applied to all channels at the same time. Press **Enter** to accept the new selection and continue to the next setting screen. Press **Escape** to cancel the new selection and return to the normal display.

The firmware filter can be turned on or off without changing the settling time value. When the firmware filter is disabled the hardware filter remains active with an approximate 200 ms time constant.

Firmware Filter (Continued)

The next filter setup screen appears as a prompt for filter On/Off.

```
Filter Setup
Channel  1

Select With ▲▼

Filter: On
```

Use the ▲ or ▼ key to choose filter on or off. Press **Enter** to accept the new selection and continue to the next setting screen. Press **Escape** to cancel the new selection and return to the normal display.

Settling time is the most important filter setting. Filter settling time can be set from 1 to 200 seconds. The table below shows how settling time is related to number of readings averaged and nominal noise attenuation. Filter settling time begins after the pause time finishes on range or channel change. Because the Model 370 uses a linear average the measurement bandwidth is not a simple function of frequency.

Settling Time(s)	Number of Readings	Attenuation of Noise
6	60	–10 dB
12	120	–16 dB
25	250	–22 dB
50	500	–28 dB
100	1000	–34 dB
200	2000	–40 dB

The next filter setup screen appears as a prompt for filter settling time.

```
Filter Setup
Channel  1

Enter A Value For

Settling Time: 30 s
```

Use the data entry keys to enter a filter settling time between 1 and 200 seconds. Press **Enter** to accept the new selection and continue to the next setting screen. Press **Escape** to restart the setting sequence and enter a new value. Press **Escape** again to cancel the sequence and return to the normal display.

Filter window is an extra feature of the filter algorithm. If a single reading is different from the filtered value by more than the window limit, the algorithm will assume the change was intentional and restart the filter. The filter window is set in percent of full scale resistance range.

The next filter setup screen appears as a prompt for filter window.

```
Filter Setup
Channel  1

Enter A Value For

Window: 10 %
```

Use the data entry keys to enter a filter window between 1 and 80 percent. Press **Enter** to accept the new selection and continue to the next setting screen. Press **Escape** to restart the setting sequence and enter a new value. Press **Escape** again to cancel the sequence and return to the normal display.

4.10 TEMPERATURE MEASUREMENT

One application of the Model 370 is measuring temperature of resistive temperature detectors (RTDs). The resistance range and excitation power of the instrument are ideal for temperature measurements using any common cryogenic RTD. Resistance of an RTD can be measured and displayed at any time. The instrument can convert resistance to temperature and display temperature in Kelvin if a temperature response curve is loaded into the instrument and assigned to the sensor. Information on how to load curves into the instrument is given in Paragraph 5.2. This paragraph summarizes other operations related to temperature measurement. Paragraph 4.11 describes temperature control.

4.10.1 Curve Selection

After a temperature response curve is loaded into the instrument it must be assigned to an input channel, even if only one channel is active. Curve selection is done under the **Input Setup** key as described in Paragraph 4.6.4. If a curve is not properly chosen for a channel, any temperature displays for that channel will show the message "NOCURV".

4.10.2 Temperature Display

After a curve is assigned to an input channel, the channel resistance, temperature, or both, can be displayed or queried over computer interface. Temperature is displayed when Kelvin units are chosen for the display data source under the **Display Setup** key as described in Paragraph 4.4.1. Refer to Paragraph 4.12 for instructions on displaying Max and Min in temperature, refer to Paragraph 4.11 for instructions on displaying a control setpoint in temperature.

4.11 TEMPERATURE CONTROL

There are many steps involved in configuring a temperature control loop. Chapter 2 of this manual describes the principals of closed loop (feedback) control. Chapter 3 describes the necessary hardware installation. This paragraph describes how to operate control features and set control parameters. Temperature measurement should be operating fully before proceeding to control. The action of each control parameter should be considered before enabling temperature control or the instrument may not be able to perform even the most simple control functions. The more complex features of setpoint ramping and zone control should only be used after the basic functions are operating.

4.11.1 Temperature Control Modes

The Model 370 offers three temperature control modes or the control output can be disabled. Each mode requires different control parameters so the control mode must be selected before other parameter values.

- **Open Loop:** Open loop control is less complicated than closed loop control but is also less powerful. Open loop control mode allows the user to directly set the heater output value using only the Manual Output parameter. During Open Loop control only the heater range and Manual Output parameters are active, the setpoint, control channel and PID parameters are ignored. This type of control guarantees constant power to the load but it does not actively control temperature. Any change in the characteristics of the cooling system or load will cause a change in temperature.

- **Closed Loop PID:** Closed loop PID control, often called feedback control, is the control mode most often associated with temperature controllers. In this mode the controller attempts to keep the load at exactly the user entered setpoint that can be entered in resistance or temperature. To do this, it uses feedback from the control sensor to calculate and actively adjust the control (heater) output. The Model 370 uses a control algorithm called PID that refers to the three terms used to tune the controller for each unique system. Manual output can also be active during closed loop control and must be set to zero if not wanted.

  The Model 370 offers two tuning modes or ways to set the necessary P, I, and D parameters for closed loop control. In closed loop PID mode the control parameter values are set manually as described in Paragraph 2.10. Once appropriate parameters are found they can be stored in the instrument and recalled with the zone feature.

- **Zone Tuning:** Optimal control parameters values are often different at varied temperatures within a system. Once values have been chosen for each temperature range or zone, the zone feature can automatically select the correct values each time the setpoint is changed. This mode does not help choose control parameter values; it helps use chosen values more efficiently. Refer to Paragraph 5.3 for details on how to program parameter values into the zone table.

- **Off:** When control is turned off the control output is set to zero. If a key related to temperature control is pressed, the display will show a message indicating that control is off. Use the **Control Setup** key to enable control by choosing one of the three control modes.

4.11.2 Control Setup

Several control parameters are grouped under the **Control Setup** key. These are considered setup parameters because they are normally set when configuring the control loop and not used often during operation. Control parameters that change often are assigned their own keys.

4.11.2.1 Setting Control Mode

Control mode is the first parameter that appears in the control setup sequence because many of the parameters that follow depend on that choice. If a parameter does not appear in the sequence, it is not used in the chosen control mode. Control mode is most often changed when the heater is turned off but it can be changed during active control. The instrument will attempt to maintain a stable control output if control mode is changed during active control.

When control mode is changed from closed loop PID to open loop the instrument will copy the closed loop heater output value to the manual output parameter. Open loop control will then maintain the same operating point if the system was stable when the mode change was made.

When control mode is changed from open loop to closed loop PID the instrument will copy the manual output value into the closed loop integrator hold memory. Closed loop control will then begin controlling to the setpoint without needing to recharge the integrator from zero.

To begin control setup press the **Control Setup** key. The first control setup screen appears as a prompt for the control mode.

```
Control Setup

Select With ▲▼
Control Mode: Closed Loop PID
```

Use the ▲ or ▼ key to select a control mode from the list in Paragraph 4.11.1. Press **Enter** to accept the new selection and continue to the next setting screen. Press **Escape** to cancel the new selection and return to the normal display.

4.11.2.2 Control Channel

One of the input channels must be selected as the control channel if a scanner is attached and a closed loop control mode is selected. The closed loop control equation gets feedback from the selected channel. Reading channels other than the control channel by manually changing scanner channel or with autoscan presents a special case for the control algorithm described in Paragraph 4.11.8. If the control channel is changed during control, the instrument will attempt to minimize disturbance to the load by choosing the reading value from the new channel as the setpoint when controlling in ohms.

NOTE: If there is not a curve assigned to the control channel, the appropriate temperature coefficient must be selected in the input setup sequence (Paragraph 4.6.4) or the PID control algorithm will not operate properly.

The next control setup screen appears as a prompt for control channel. If no scanner is installed, this screen will be skipped.

```
Control Setup

Select With ▲▼
Control Channel: 1
```

Use the ▲ or ▼ key to select a control channel from 1 to 16. Press **Enter** to accept the new selection and continue to the next setting screen. Press **Escape** to cancel the new selection and return to the normal display.

4.11.2.3 Setpoint Units

Closed-loop temperature control will operate with a setpoint in resistance units for any input channel and a setpoint in Kelvin for any channel that has a temperature response curve assigned to it. Setpoint units will default to ohms if no curve is selected for the control channel. If the setpoint units are changed during control, the instrument will convert the setpoint value to the new units when possible to minimize disturbance to the load.

The next control setup screen appears as a prompt for setpoint units.

```
Control Setup

Select With ▲▼
Setpoint Units: Kelvin
```

Use the ▲ or ▼ key to select setpoint units of ohms or Kelvin. Press **Enter** to accept the new selection and continue to the next setting screen. Press **Escape** to cancel the new selection and return to the normal display.

4.11.2.4 Setpoint Change Pause Time

The temperature control loop needs time to settle after any setpoint change. If temperature control is active while scanning channels, the loop may not get enough time to settle into the new setpoint before the scanner moves away from the control channel. The instrument can be forced to read only the control channel for a period of time after any setpoint change to guarantee settling. This time period is set with the setpoint change pause parameter. Manually changing scanner channel will override the pause and force a reading.

The next control setup screen appears as a prompt for the setpoint change pause time.

```
Control Setup

Enter A Value For
Setpoint Change Pause Time:  25  s
```

Use the data entry keys to enter a change pause time from 1 to 255 seconds. Press **Enter** to accept the new selection and continue to the setpoint ramp feature, Paragraph 4.11.7. Press **Escape** to restart the setting sequence and enter a new value. Press **Escape** again to cancel the sequence and return to the normal display.

4.11.2.5 Control Filter

During normal operation the PID control algorithm uses the unfiltered input readings from the control channel as its feedback. This method offers the best control stability and some noise immunity because of the natural averaging that takes place in the integrator (I) part of the control equation. The control algorithm can be configured to use filtered readings instead of unfiltered readings. This configuration can improve noise rejection but it is sometimes at the expense of more difficult tuning or even control instability. The filter creates time lag that destabilizes the control loop. Control uses the same firmware filter parameters set for the control input channel. Any control application should be tuned first with the control filter off. Filter action should be added gradually, starting with a very short settling time, and adjustments to P and I made be required along the way (most often P will decrease and I will increase). The filter time constant should always remain shorter than the I setting in seconds.

The next control setup screen appears as a prompt for control filter On/Off.

```
Control Setup

Select With ▲▼
Control Filter: Off
```

Use the ▲ or ▼ key to select control filter on or off. Press **Enter** to accept the new selection and continue to the next setting screen. Press **Escape** to cancel the new selection and return to the normal display.

4.11.2.6 Heater Output Display

The heater output or control output is a variable DC current source with several ranges to accommodate different loads. The Model 370 can be configured to display the output range as its full scale current and the output as a percent of that current. This configuration is helpful in setup and tuning of a control system but does not provide good information on power entering the load. The instrument can also be configured to display the output range by its full scale power and the output as power in watts. This configuration is better for predicting the power entering the load but it relies on an accurate heater resistance being entered into the instrument, refer to Paragraph 4.11.2.7. The manual output parameter also follows this units setting.

The next control setup screen appears as a prompt for the heater output display to be in current or power.

```
Control Setup

Select With ▲▼
Heater Display: Current
```

Use the ▲ or ▼ key to select heater output display as current or power. Press **Enter** to accept the new selection and continue to the next setting screen. Press **Escape** to cancel the new selection and return to the normal display.

4.11.2.7 Heater Resistance

The Model 370 does not need to know heater resistance to perform control its control functions. Heater resistance is only required to accurately display the heater output and manual output in power. The instrument does not measure heater resistance so one must be entered for these display values to be meaningful. A 100 Ω heater is required for maximum power output but other values can be used. If a heater resistance is not known, the heater output display should be configured for current.

The next control setup screen appears as a prompt for the heater resistance.

```
Control Setup

Enter A Value For
Heater Resistance: 100.00 Ω
```

Use the data entry keys to enter a heater resistance between 1 and 100,000 ohms. Press **Enter** to accept the new selection and continue to the next setting screen. Press **Escape** to restart the setting sequence and enter a new value. Press **Escape** again to cancel the sequence and return to the normal display.

4.11.2.8 Heater Range Limit

The one watt maximum heater output power available from the Model 370 can be far too much for some loads. The heater range limit parameter allows the user to lock out higher heater ranges so they are not accidentally selected from the front panel. The limit setting represents the highest allowable heater range and is always set in current. To disable the control output entirely, refer to Paragraph 4.11.1.

The next control setup screen appears as a prompt for the heater range limit.

```
Control Setup

Select With ▲▼
Heater Limit: 100mA
```

Use the ▲ or ▼ key to select a heater range limit from 100 mA to 31.6 µA as limit. Press **Enter** to accept the new selection and continue to the next setting screen. Press **Escape** to cancel and return to the normal display.

4.11.2.9 Heater Polarity

When the heater output is used in a traditional manner, to drive a resistive load, the heater output needs to be unipolar since reversing the current will still heat the load. There may be some rare circumstances when the heater output is not connected to a resistive load and bipolar control is desired. The heater output can be set to control the current to plus and minus the full-scale range by setting the heater polarity to bipolar mode. For the majority of applications and any application where the heater output is connected to a resistive load, the unipolar mode should be chosen.

The next control setup screen appears as a prompt for the heater polarity.

```
Control Setup

Select With ▲▼
Polarity: Unipolar
```

Use the ▲ or ▼ key to select the heater polarity of unipolar or bipolar. Press **Enter** to accept the new selection and continue to the next setting screen. Press **Escape** to cancel and return to the normal display.

4.11.3 Changing Setpoint

The control setpoint indicates the desired load temperature. It can be expressed in either ohms or Kelvin. If there is not a temperature response curve assigned to the control channel, the setpoint units will default to ohms. To change setpoint units refer, to Paragraph 4.11.2.3.

The instrument allows a large setpoint range to accommodate a variety of sensor types and applications. In resistance the setpoint can range from micro ohms to mega ohms. In temperature the setpoint can range from milliKelvin to over 1000 Kelvin. A setpoint limit in Kelvin can be entered in the temperature response curve. This limit is in force for the control channel only and only when operating with setpoint units of Kelvin.

Setpoint resolution matches the 6-digit display resolution of the measurement. Maximum and minimum setpoint range and resolution are shown below.

Maximum Resistance:	100.000 MΩ
Minimum Resistance:	0.000001 mΩ
Maximum Temperature:	1500.00 K
Minimum Temperature:	00.0001 mK

To change the control setpoint press the **Setpoint** key. The setpoint value on the normal display will be highlighted to prompt for the numeric part of the new setpoint value.

```
Setpoint 100.000 kΩ
```

Use the data entry keys to enter the numeric setpoint value. Press **Enter** to accept the new value and advance to the units multiplier. Press **Escape** to restart the setting sequence and enter a different value. Press **Escape** again to leave the setting sequence.

The setpoint units multiplier on the normal display will be highlighted to prompt for that portion of the new setpoint value.

```
Setpoint 100.000 kΩ
```

Use the ▲ or ▼ key to select a units multiplier of m, blank, k, or M. Press **Enter** to accept the new selection and complete the setting sequence. Press **Escape** to restart the setting sequence and enter a different value. Press **Escape** again to leave the setting sequence.

4.11.4 Manually Setting PID Values

When operating the Model 370 as a temperature controller in closed loop PID mode, proportional (P), integral (I) and derivative (D) parameter values must be properly selected to tune the control loop. Chapter 2 of this manual describes the principals of closed loop (feedback) control including some tuning suggestions. PID values may need to change any time the control temperature, cooling power or heater range change. Once parameter values are determined for several temperatures they can be entered into the zone table and recalled automatically as described in Paragraph 5.3. The manual output parameter can also be used during closed loop control but it should be set to zero for normal tuning.

4.11.4.1 Manually Setting Proportional (P)

The proportional parameter (also called gain) is the P part of the PID equation. It has a range of 0.001 to 1000. The default value for P is 10. To begin control PID setting sequence press the **PID** key. The first PID setup screen appears as a prompt for a P value.

```
PID Setup

Enter A Value For
Proportional (P): 10.000
```

Use the data entry keys to enter a proportional value between 0.001 and 1000. Press **Enter** to accept the new selection and continue to the next setting screen. Press **Escape** to restart the setting sequence and enter a new value. Press **Escape** again to cancel the sequence and return to the normal display.

4.11.4.2 Manually Setting Integral (I)

The integral parameter (also called reset) is the I part of the PID equation. It has a setting range of 1 to 10,000 seconds. A setting of zero turns I off. The default value for I is 20 seconds. The next PID setup screen appears as a prompt for an I value.

```
PID Setup

Enter A Value For
Integral (I): 20.000  s
```

Use the data entry keys to enter an integral value between 1 and 10,000 or zero for off. Press **Enter** to accept the new selection and continue to the next setting screen. Press **Escape** to restart the setting sequence and enter a new value. Press **Escape** again to cancel the sequence and return to the normal display.

4.11.4.3 Manually Setting Derivative (D)

The derivative parameter (also called rate) is the D part of the PID equation. It has a setting range of 1 to 2500 seconds. A setting of zero turns D off. The default value for D is zero (off). The next PID setup screen appears as a prompt for a D value.

```
PID Setup

Enter A Value For
Derivative (D): 0.0000  s
```

Use the data entry keys to enter a derivative value between 1 and 2500 or zero for off. Press **Enter** to accept the new selection and return to the normal display. Press **Escape** to restart the setting sequence and enter a new value. Press **Escape** again to cancel the sequence and return to the normal display.

4.11.5 Manual Heater Output

Manual heater output is most often used during open loop control but it is also active during closed loop PID control. Operation of the parameter is different during the two control modes. During open loop control the instrument uses the manual output value to calculate the heater output on a given heater range. This allows the user direct control of the output. During closed loop control the manual output value is added to the result of the PID control equation. In effect, the PID algorithm operates about the manual output setting. Manual output should be set to zero for most closed loop control applications.

Manual output units follow the heater output display units of current or power. In current units the manual output parameter is set in percent of full scale current for the selected heater range. The setting range is from 0 to 100 % with a setting resolution of 0.001%. The actual output resolution is close to the setting resolution. In power units the manual output parameter is set in watts. An accurate heater resistance must be entered under control setup for the power calculation to be accurate. The setting range is from 0 to full scale power for the selected heater range with a setting resolution of six digits. The actual resolution is limited to the 0.001% resolution of the heater output current source.

Manual heater output value may be changed by the instrument if the control mode or heater range are changed during active control.

To enter a manual heater output value press the **Manual Output** key. The following screen appears as a prompt for the manual output value. This example illustrates the manual output setting sequence with heater output display units set to power on the 10 mW (10 mA and 100 Ω) heater range.

```
Manual Output

Enter A Value For
Manual Output: 0.000 mW
```

Use the data entry keys to enter a manual output value between 0 and full scale. The units multiplier is determined by the heater range and can not be changed. Press **Enter** to accept the new selection and return to the normal display. Press **Escape** to restart the setting sequence and enter a new value. Press **Escape** again to cancel the sequence and return to the normal display.

NOTE: The heater output value shown on the normal display may be truncated to fit in its display space but full setting resolution is retained in the instrument.

4.11.6 Heater Output Range and Heater Output Off

The temperature control heater output is a low noise, variable DC current source. It can provide up to 1 watt of continuous power into a resistive heater on the cooled load. Lower heater ranges are provided to allow good control resolution at lower temperatures where cooling power diminishes. Higher current ranges can be locked out under control setup operation if they can potentially overheat and damage the load. Heater range is an integral part of the closed loop control system so re-tuning may be required when heater range is changed.

The heater output range follows the heater output display units of current or power. An appropriate heater resistance must be entered under control setup for the power calculation to be meaningful. The maximum current or power is used on the display to indicate the selected range. Some examples of heater power versus heater resistance are given in Paragraph 3.7.4.

The temperature control heater output has several hardware and firmware protection features to prevent accidental overheating of loads. Hardware protection includes short circuit protection and built in circuitry that limits the transient energy sourced by the output when power is turned on or the range is changed. The instrument firmware will turn off the heater when an overload or other error condition is detected on the control channel or if there is no heater load attached. The instrument always powers up with the heater off.

Heater Output Range and Heater Output Off (Continued)

To change the heater output range press the **Heater Range** key. The old range selection on the display will be highlighted to prompt for the new range setting.

```
Heat 0.00mW of 10.0mW
```

Use the ▲ or ▼ key to select one of the eight heater output ranges. Press **Enter** to accept the new selection and complete the setting sequence. Press **Escape** to cancel the new value and leave the setting sequence.

To turn the heater output off press the **Heater Off** key. The power to the heater will quickly be turned off and the following display will appear.

```
Heat          Off
```

4.11.7 Setpoint Ramp

The Model 370 can be configured to ramp the control setpoint from its present value to a new value. The ramp can produce a smooth, linear transition in temperature rather than the step response normally associated with closed loop PID control. For the feature to have a beneficial effect, the ramp rate must be slower than the time response of the load. The ramp feature will only operate if the setpoint units are Kelvin.

The ramp rate is set in Kelvin per minute with a range of 0.001 to 10 and a resolution of 0.001. Once the feature is turned on and a rate is set, ramp action is initiated by a setpoint change. When a new setpoint value is entered the instrument changes the setpoint from the old value to the new value in small increments that correspond to the ramp rate. The ramp rate is entered as a positive number but it can be used for ramping up and down in temperature.

When the ramp feature is turned on the Ramp annunciator will be shown on the top line of the display. During an active ramp the annunciator will blink. When the instrument is waiting for a setpoint change the annunciator is steady. If the setpoint units are set to ohms or the heater range is turned off, the ramp annunciator will remain steady and the setpoint will go directly to the new value.

To configure the ramp feature press the **Control Setup** key and press **Enter** until the following display appears as a prompt for ramp on/off.

```
Control Setup

Select With ▲▼
Setpoint Ramp: On
```

Use the ▲ or ▼ key to choose ramp on or off. Press **Enter** to accept the new selection and continue to the next setting screen. If the ramp feature is set to off, the ramp rate parameter will be skipped. Press **Escape** to cancel the new selection and return to the normal display. If the ramp feature is turned on, the next setup screen appears as a prompt for ramp rate.

```
Control Setup

Enter A Value For
Ramp Rate: 0.00100 K/m
```

Use the data entry keys to enter a ramp rate value between 0.001 and 10 K/m. Press **Enter** to accept the new selection and continue to the next setting screen. Press **Escape** to restart the setting sequence and enter a different value. Press **Escape** again to cancel the sequence and return to the normal display.

To begin a ramp, enter a new setpoint value. To stop an active ramp at its present value, press **Setpoint** and then press **Enter** twice.

4.11.8 Controlling and Scanning

The Model 370 and 3716 Scanner allow both temperature control and data taking at the same time. Firmware in the Model 370 manages automatic switching between the control channel and scan channel and will maintain the control heater output when the control channel is not active. Scanning during closed loop temperature control will never be as stable as dedicated control instrument but with proper setup acceptable performance can be achieved for many applications.

4.11.8.1 Reading Sequence

The instrument takes control of the reading sequence when controlling temperature with one scanner channel and measuring on another. It will alternate between the control channel and selected scan channel as quickly as possible so that control is not suspended for longer than necessary. If autoscan is enabled, the instrument will read the control channel between each active scan channel. It forces the scan dwell time to five seconds for the control channel and one second for other reading channels.

4.11.8.2 Settling Time

Settling time on channel change is very important when alternating between control and other readings. Longer settling times suspend active control for longer periods of time increasing instability. The change pause must be set appropriately for each active channel and the filter should have as short a settling time as possible. Filter should be turned off for control.

4.12 MAX/MIN CAPTURE

The Max/Min feature automatically captures the largest and smallest valid readings taken since the last reset. The feature operates at the full update rate of 10 readings per second. It is suspended during range or channel change and captured readings are lost when power is turned off. The maximum and minimum readings can be displayed in any of the 8 reading display locations (Paragraph 4.4.1). The Model 370 will only capture Max/Min data from one data source per channel. The Max/Min feature uses filtered reading data when the filter is enabled.

To select a Max/Min data source the **Max/Min** key and press **Enter** to skip past the reset screen. If a scanner is installed, the first input setup screen appears as a prompt for the channel number. If no scanner is installed, the sequence will begin below with source selection.

```
Max/Min Setup

Select With ▲▼

Channel: 1
```

Use the ▲ or ▼ key to select a channel number between 1 and 16. Choose the selection "All" and the changes will be applied to all channels at the same time. Press **Enter** to accept the new selection and continue to the next setting screen. Press **Escape** to cancel the new selection and return to the normal display.

The next display setup screen appears as a prompt for the source of Max/Min data for the selected channel. Changing the data source will reset captured values for the selected channel.

```
Max/Min Setup
Channel  1

Select With ▲▼

Data Source: Ohms
```

Use the ▲ or ▼ key to select one of three data sources, ohms, Kelvin, or linear (result of the linear equation). Press **Enter** to accept the new selection and return to the normal display. Press **Escape** to cancel the new selection and return to the normal display.

Max/Min Capture (Continued)

To reset the Max/Min feature press the **Max/Min** key twice. The following message appears as a prompt after the key is pressed the first time. Captured values for all inputs will be reset at the same time.

```
Press Max/Min To Reset
Enter To Continue.
```

4.13 LINEAR EQUATION (ΔR)

The Model 370 can scale one source of reading data from each channel with either of two linear equations. Scaled readings can be displayed or sent to the analog voltage output as a control signal. The feature can be configured to calculate an error value, ΔR, or a scaled error value such as 10ΔR.

The two equations, MX+B and M(X+B), have subtle differences. The first equation is most often used to scale a sensor reading that has a linear response but requires offset and gain correction. The second can easily produce a scaled error value when the control setpoint is used for B. A summary of parameter selections is listed as follows:

Equation	M	X	B
MX+B M(X+B)	Value	Ohms Kelvin	Value +SP –SP

where M = Slope of line, X = Reading data, B = Offset of line, Value = Number value entered by user, and SP = Temperature control setpoint value.

The instrument will calculate meaningless numbers if this feature is not configured properly. For example, the setpoint units and reading units for X must match if SP is used in the equation. The display resolution can also be misleading. For example, the scaled error value of 10ΔR does offer more measurement resolution than the normal display reading. However, increasing the slope, M, to 100 or 1000 will only increase the display resolution and not the measurement resolution.

To begin linear equation setup press the **Linear (ΔR)** key. If a scanner is installed, the first filter setup screen appears as a prompt for the channel number for X. All of the parameter changes that follow will act on the selected channel. If no scanner is installed, the sequence will begin below with equation selection.

```
Linear Setup

Select With ▲▼
Channel: 1
```

Use the ▲ or ▼ key to select a channel number between 1 and 16. Choose the selection "All" and the changes will be applied to all channels at the same time. Press **Enter** to accept the new selection and continue to the next setting screen. Press **Escape** to cancel the new selection and return to the normal display.

The next linear setup screen appears as a prompt for the equation.

```
Linear Setup
Channel  1
Select With ▲▼
Equation: M(X+B)
```

Use the ▲ or ▼ key to select M(X+B) or MX+B. Press **Enter** to accept the new selection and continue to the next setting screen. Press **Escape** to cancel the new selection and return to the normal display.

Linear Equation (Continued)

The next linear setup screen appears as a prompt for a slope value, M.

```
Linear Setup
Channel  1

Enter A Value For

Slope (M): 1.0000
```

Use the data entry keys to enter a slope between 0.001 and 1000. Press **Enter** to accept the new selection and continue to the next setting screen. Press **Escape** to restart the setting sequence and enter a different value. Press **Escape** again to cancel the sequence and return to the normal display.

The next linear setup screen appears as a prompt for data source for the selected input, X.

```
Linear Setup
Channel  1

Select With ▲▼

X Source: Kelvin
```

Use the ▲ or ▼ key to select between Kelvin and ohms. Press **Enter** to accept the new selection and continue to the next setting screen. Press **Escape** to cancel the new selection and return to the normal display.

The next linear setup screen appears as a prompt for the source of the offset, B. If either setpoint variable is selected, the next setting screen will be skipped. If value is selected, the next setting screen will appear to allow the entry of a value for B.

```
Linear Setup
Channel  1

Select With ▲▼

B Source: Value
```

Use the ▲ or ▼ key to select a source for B as either Value, +SP or –SP. Press **Enter** to accept the new selection and continue to the next setting screen. Press **Escape** to cancel the new selection and return to the normal display.

The next linear setup screen appears as a prompt for an offset value, B, if value was selected on the previous screen.

```
Linear Setup
Channel  1

Enter A Value For

Offset (B): +0.00000  LN
```

Use the data entry keys to enter an offset between 1×10^{-6} and 100×10^{6} depending on selected units. Enter the numeric value first. Press **Enter** to accept the new value and advance to the units multiplier (LN is the source designator used on the display for the linear equation). Use the ▲ or ▼ key to select a units multiplier of m, blank, k or M. Press **Enter** to accept the new selection and continue to the next setting screen. Press **Escape** to restart the setting sequence and enter a new value. Press **Escape** again to cancel the sequence and return to the normal display.

The offset screen is the last screen in the linear equation setup sequence if temperature control is enabled.

Linear Equation (Continued)

A setpoint setting screen appears in the sequence if temperature control is disabled because the **Setpoint** key is locked out.

```
Linear Setup
Channel  1

Enter A Value For

Setpoint: 100.00 mK
```

Use the data entry keys to enter a setpoint value. Enter the numeric value first. Press **Enter** to accept the new value and advance to the units multiplier. Use the ▲ or ▼ key to select a units multiplier of m, blank, k, or M. Press **Enter** to accept the new selection and return to the normal display. Press **Escape** to restart the setting sequence and enter a new value. Press **Escape** again to cancel the sequence and return to the normal display.

4.14 ALARMS

The Model 370 can compare reading data from each channel to a high and low alarm setpoint. Alarm setpoints and most other alarm parameters can be set independently for each channel. If the Model 3716 Scanner is installed, the alarm operates for the active scan channel only. The alarm feature uses filtered reading data when the filter is enabled.

When any alarm is enabled the Alarm annunciator will be shown on the top line of the display. The annunciator remains steady if neither alarm is in the active alarm state. It blinks when either alarm is active. The alarming channel does not have to be displayed for the alarm annunciator to indicate status. If a Model 3716 Scanner is installed, the alarm annunciator follows the active scan channel to indicate the alarm status of that channel. The instrument has an audible alarm beeper that can be programmed to sound is any of the alarms are active. The relays described in Paragraph 4.15 can also be programmed to follow the alarm feature.

The alarm feature has two modes of operation, latching and non-latching. The operation of these modes is described below.

Latching Operation: During latching operation, if the reading value is ever greater than the high alarm setpoint, the high alarm for that channel is latched in as an active state. Similarly, if the reading value is ever lower than the low alarm setpoint, the low alarm for that channel is latched in. The alarm remains active until the alarm condition has been cleared **and** the alarm feature is reset. This mode is often used to detect faults in a system or experiment that require operator intervention. The alarm remains visible to the operator for diagnostics even if the alarm condition no longer exists.

Non-latching Operation: During non-latching operation, the high alarm remains active only as long as the reading value is greater than the high alarm setpoint. Similarly, the low alarm remains active only as long as the reading value is lower than the low alarm setpoint. No action is required from the operator to reset the alarm state after the alarm condition is cleared. The deadband parameter is available to prevent the alarm from chattering (turning on and off repeatedly) when the reading value is very near the setpoint. This mode provides a simple form of control that is often actuated through a relay. An example of non-latching operation is shown below.

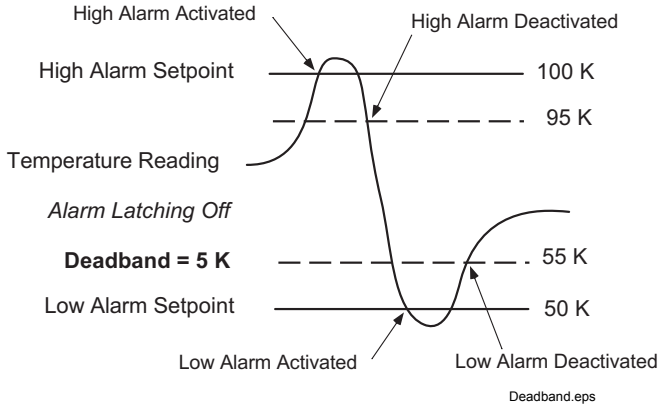

Figure 4-2. Deadband Example

Alarms (Continued)

To begin alarm setup press the **Alarm** key and press **Enter** to skip past the reset screen. If a scanner is installed, the alarm setup screen appears as a prompt for the channel number. All of the parameter changes that follow will act on the selected channel. If no scanner is installed, the sequence will begin below with source selection.

```
Alarm Setup

Select With ▲▼

Channel: 1
```

Use the ▲ or ▼ key to select a channel number between 1 and 16. Choose the selection "All" and the changes will be applied to all channels at the same time. Press **Enter** to accept the new selection and continue to the next setting screen. Press **Escape** to cancel the new selection and return to the normal display.

The next alarm setup screen appears as a prompt for the data source.

```
Alarm Setup
Channel  1

Select With ▲▼

Data Source: Ohms
```

Use the ▲ or ▼ key to select one of three data sources, ohms, Kelvin, or linear (result of the linear equation). Press **Enter** to accept the new selection and continue to the next setting screen. Press **Escape** to cancel the new selection and return to the normal display.

The next alarm setup screen appears as a prompt for the low alarm setpoint value.

```
Alarm Setup
Channel  1

Enter A Value For

Low Setpoint: 0.00000  Ω
```

Use the data entry keys to enter the low setpoint between 1×10^{-6} and 100×10^{6} depending on selected units. Enter the numeric value first. Press **Enter** to accept the new value and advance to the units multiplier. Use the ▲ or ▼ key to select a units multiplier of m, blank, k or M. Press **Enter** to accept the new selection and continue to the next setting screen. Press **Escape** to restart the setting sequence and enter a new value. Press **Escape** again to cancel the sequence and return to the normal display.

The next alarm setup screen appears as a prompt for the high alarm setpoint value.

```
Alarm Setup
Channel  1

Enter A Value For

High Setpoint: 0.00000  Ω
```

Use the data entry keys to enter the high setpoint between 1×10^{-6} and 100×10^{6} depending on selected units. Enter the numeric value first. Press **Enter** to accept the new value and advance to the units multiplier. Use the ▲ or ▼ key to select a units multiplier of m, blank, k, or M. Press **Enter** to accept the new selection and continue to the next setting screen. Press **Escape** to restart the setting sequence and enter a new value. Press **Escape** again to cancel the sequence and return to the normal display.

Alarms (Continued)

The next alarm setup screen appears as a prompt for latching or non-latching.

```
Alarm Setup
Channel  1
Select With ▲▼
Alarm: Non-latching
```

Use the ▲ or ▼ key to select latching or non-latching. Press **Enter** to accept the new selection. If latching is selected, the deadband screen will be skipped. Press **Escape** to cancel the new selection and return to the normal display.

The next alarm setup screen appears as a prompt for the alarm deadband value if the alarm is configured for non-latching operation.

```
Alarm Setup
Channel  1
Enter A Value For
Deadband: 0.00000  Ω
```

Use the data entry keys to enter the deadband value between 1×10^{-6} and 100×10^{6}, or zero, depending on selected units. Enter the numeric value first. Press **Enter** to accept the new value and advance to the units multiplier. Use the ▲ or ▼ key to select a units multiplier of m, blank, k or M. Press **Enter** to accept the new selection and continue to the next setting screen. Press **Escape** to restart the setting sequence and enter a new value. Press **Escape** again to cancel the sequence and return to the normal display.

The next alarm setup screen appears as a prompt for alarm On/Off. If the alarm feature is turned off, this will be the first setting screen to appear.

```
Alarm Setup
Channel  1
Select With ▲▼
Alarm: On
```

Use the ▲ or ▼ key to select alarm on or off. Press **Enter** to accept the new selection and continue to the next setting screen. Press **Escape** to cancel the new selection and return to the normal display.

The next alarm setup screen appears as a prompt for audible alarm beeper On/Off. The audible alarm is turned on or off for all channels at the same time.

```
Alarm Setup

Select With ▲▼
Audible Alarm: Off
```

Use the ▲ or ▼ key to select audible alarm on or off. Press **Enter** to accept the new selection and return to the normal display. Press **Escape** to cancel the new selection and return to the normal display.

To reset latched alarms clear the alarm condition and press the **Alarm** key twice. The following message appears as a prompt after the key is pressed the first time. Latched alarms from all channels will be reset.

```
Press Alarm To Reset
Enter To Continue.
```

4.15 RELAYS

The Model 370 has two mechanical relays designated high and low. The relays are most commonly associated with the high and low alarms, but they can also be controlled manually and used for other purposes. Both relays default to their normal state when instrument power is turned off.

The relays have three modes of operation:

Manual: The relay is turned off (normal) or on (active) manually from the front panel or over computer interface.

Alarm: The relay is configured to follow the operation of the alarms. The user can assign channel number to each relay and tie the action of the relay to the high alarm, low alarm or both alarms of that channel. The relay is activated any time the associated alarm is active.

Zone: The relay is operated with the zone control feature as described in Paragraph 5.3.

Press the **Relay** key to begin relay setup. The following message appears as a prompt for relay selection.

```
Relay Setup

Select With ▲▼
Relay: Low
```

Use the ▲ or ▼ key to select the high or low relay. Press **Enter** to accept the new selection and continue to the next setting screen. Press **Escape** to cancel the new selection and return to the normal display.

The next relay setup screen appears as a prompt for operating mode.

```
Relay Setup
Low Relay
Select With ▲▼
Mode: Alarm
```

Use the ▲ or ▼ key to select the relay mode Manual Off, Manual On, Alarm, or Zone. Press **Enter** to accept the new selection and continue. If alarm is selected the next setting screen will appear, otherwise the instrument will return to the normal display. Press **Escape** to cancel the new selection and return to the normal display.

If the relay operation is set to alarm mode and a Model 3716 Scanner is installed, the next setting screen will appear to prompt for channel number. If no scanner is installed, this screen will be skipped.

```
Relay Setup
Low Relay
Select With ▲▼
Channel: 1
```

Use the ▲ or ▼ key to select a channel number between 1 and 16 or "Scan". Select "Scan" and the relay will follow the active scan channel. Press **Enter** to accept the new selection and continue to the next setting screen. Press **Escape** to cancel the new selection and return to the normal display.

If the relay is in alarm mode, the next relay setup screen appears as a prompt for an alarm selection.

```
Relay Setup
Low Relay
Select With ▲▼
Alarm: Low
```

Use the ▲ or ▼ key to select low, high or both alarms. Press **Enter** to accept the new selection and return to the normal display. Press **Escape** to cancel the new selection and return to the normal display.

4.16 ANALOG OUTPUTS

The Model 370 has two analog voltage outputs designated ANALOG OUT 1 and ANALOG OUT 2 (STILL). They are variable DC voltage sources that can vary from +10 V to –10 V. The voltages are generated from a 16-bit digital to analog converter (DAC) with a resolution of 0.3 mV or 0.003 % of full scale. The outputs are short-circuit protected but should not be used to drive a resistance of less than 100 Ω. They are capable of sourcing up to 1 W of power making them useful as auxiliary heater supplies. Built in circuitry limits the transient energy sourced by the outputs when power is turned on to the instrument. Analog Output 2 can be configured as a still heater output for a dilution refrigerator as described in Paragraph 4.17.

The analog voltage outputs have four modes of operation described below. In addition to these operating modes the outputs can be turned off or configured for unipolar only operation.

Manual: The analog output is controlled manually from the instrument front panel or over computer interface. Setting range is –100% to +100% with a setting resolution of 0.001%. The true output resolution is limited to 0.003%.

Input: The analog output is configured to follow measured reading of an input channel. The user can select the channel (if a Model 3716 Scanner is installed), the data source and scale the output by defining the reading values that correspond to the maximum and minimum output values. An example of this mode is given below.

Zone: The analog output is operated with the zone control feature as described in Paragraph 5.3.

Still: Analog Output 2 is operated manually using the **Still Output** key as described in Paragraph 4.17.

Press the **Analog Out** key to begin analog output setup. The following setup screen appears as a prompt for analog output selection.

```
Analog Out Setup

Select With ▲▼

Analog Out: 1
```

Use the ▲ or ▼ key to select analog output 1 or 2. Press **Enter** to accept the new selection and continue to the next setting screen. Press **Escape** to cancel the new selection and return to the normal display.

The next analog output setup screen appears as a prompt for bipolar/unipolar.

```
Analog Out Setup
Analog Out 1

Select With ▲▼

Polarity: Unipolar
```

Use the ▲ or ▼ key to select between bipolar and unipolar. Press **Enter** to accept the new selection and continue to the next setting screen. Press **Escape** to cancel the new selection and return to the normal display.

The next analog output setup screen appears as a prompt for the analog output mode.

```
Analog Out Setup
Analog Out 1

Select With ▲▼

Mode: Input
```

Use the ▲ or ▼ key to select one of the following modes Input, Manual, Zone, Still (for Analog Out 2 only), or Off. Press **Enter** to accept the new selection and continue to the next setting screen. If the manual mode is selected, the next setting screen will be for manual output value. If input is selected, the next setting screen will be for input channel. Press **Escape** to cancel the new selection and return to the normal display.

Analog Outputs (Continued)

If manual mode is selected, the next analog output setup screen appears as a prompt for the manual output value.

```
Analog Out Setup
Analog Out 1

Enter A Value For

Manual Output: +0.0000  %
```

Use the data entry keys to enter a manual output value –100 % and +100% in bipolar mode or 0 and +100% in unipolar mode. Press **Enter** to accept the new selection and continue to the bipolar/unipolar setting screen. Press **Escape** to restart the setting sequence and enter a different value. Press **Escape** again to cancel the sequence and return to the normal display.

If input mode is selected and a scanner is installed, the next analog output setup screen appears as a prompt for the input channel. If no scanner is installed, the sequence skips to source selection.

```
Analog Out Setup
Analog Out 1

Select With ▲▼

Channel: 1
```

Use the ▲ or ▼ key to select a channel number between 1 and 16. Press **Enter** to accept the new selection and continue to the next setting screen. Press **Escape** to cancel the new selection and return to the normal display.

The next analog output setup screen appears as a prompt for input data source.

```
Analog Out Setup
Analog Out 1

Select With ▲▼

Data Source: Kelvin
```

Use the ▲ or ▼ key to select one of three data sources: ohms, Kelvin, or linear (result of the linear equation). Press **Enter** to accept the new selection and continue to the next setting screen. Press **Escape** to cancel the new selection and return to the normal display.

The next analog output setup screen appears as a prompt for the low endpoint. This example illustrates the low endpoint setting sequence for unipolar operation.

```
Analog Out Setup
Analog Out 1

Enter A Value For

0V Endpoint:   0.00000  K
```

Use the data entry keys to enter the endpoint value between 1×10^{-6} and 100×10^{6} depending on selected units. Enter the numeric value first. Press **Enter** to accept the new value and advance to the units multiplier. Use the ▲ or ▼ key to select a units multiplier of m, blank, k or M. Press **Enter** to accept the new selection and continue to the next setting screen. Press **Escape** to restart the setting sequence and enter a new value. Press **Escape** again to cancel the sequence and return to the normal display.

Analog Outputs (Continued)

The next analog output setup screen appears as a prompt for the high endpoint.

```
Analog Out Setup
Analog Out 1

Enter A Value For

+10V Endpoint: 0.00000  K
```

Use the data entry keys to enter the endpoint value between 1×10^{-6} and 100×10^{6} depending on selected units. Enter the numeric value first. Press **Enter** to accept the new value and advance to the units multiplier. Use the ▲ or ▼ key to select a units multiplier of m, blank, k, or M. Press **Enter** to accept the new selection and return to the normal display. Press **Escape** to restart the setting sequence and enter a new value. Press **Escape** again to cancel the sequence and return to the normal display.

Figure 4-3 illustrates the operation of an analog output configured to follow an input channel in Kelvin with a low endpoint of 0 mK and a high endpoint of 100 mK. Both unipolar and bipolar operation is represented.

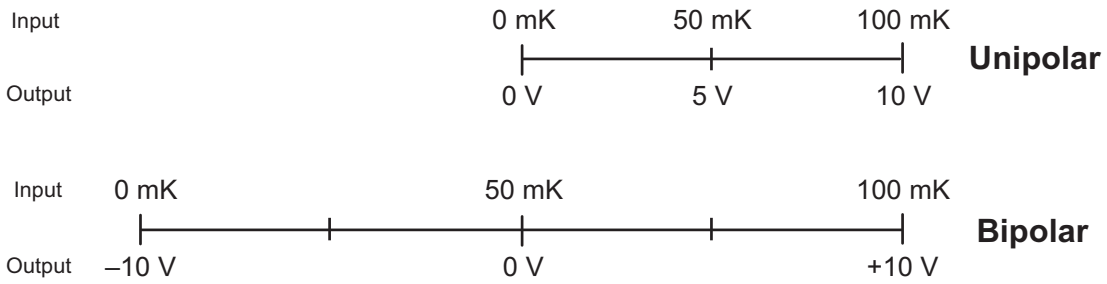

Figure 4-3. Unipolar Versus Bipolar Analog Output

4.17 STILL OUTPUT

The Model 370 can provide the small amount of power required to drive the still heater of a dilution refrigerator with analog voltage output 2. None of the analog output hardware changes when it is configured for still operation. Paragraph 3.8.3 describes how to estimate the full-scale current sourced to a resistive heater. When analog output 2 is in still mode, the **Still** key gives direct access to the still output parameter which is used to set a percentage of the full scale current. The still output parameter is the same as the manual output parameter in manual mode but the setting can be made without sequencing through the analog output menu.

To use Analog Output 2 as a still heater output configure the analog output in still mode as described in Paragraph 4.16. Unipolar operation is recommended for this application. Press the **Still** key and the following screen appears as a prompt for the output value.

```
Still Output

Enter A Value For

Still Output: +0.0000  %
```

Use the data entry keys to enter a still output value –100 % and +100% in bipolar mode or 0 and +100% in unipolar mode. Press **Enter** to accept the new selection and return to the normal display. Press **Escape** to restart the setting sequence and enter a different value. Press **Escape** again to cancel the sequence and return to the normal display.

4.18 LOCKING THE KEYPAD

The keypad lock feature prevents accidental changes to parameter values. When the keypad is locked most parameter values may be viewed but only a few can be changed from the front panel. The temperature control heater can be turned off but not changed in range and latched alarms can be reset when the keypad is locked.

A 3-digit code must be used to lock and unlock the keypad. The factory default code is **123** and it can only be changed using a computer interface. If the instrument parameters are set to default values, the code is reset to the factory default. The instrument parameters cannot be reset to default values from the front panel when the keypad is locked.

The following message will appear on the display if the user attempts to change a locked parameter.

```
Locked
```

NOTE: The computer interface has a remote operation mode that may be mistaken for a locked keypad. If the display shows the Remote annunciator on the top line, press the **Local** key to regain local control of the instrument.

To lock the instrument keypad press and hold the **Enter** key for 5 seconds. The following screen appears as a prompt for the 3-digit lock code.

```
Enter Code To
Lock Keypad
```

Use the data entry keys to enter the 3-digit lock code (default 123). The instrument returns to the normal display with the keypad locked.

To unlock the instrument keypad press and hold the **Enter** key for 5 seconds. The following screen appears as a prompt for the 3-digit lock code.

```
Enter Code To
Unlock Keypad
```

Use the data entry keys to enter the 3-digit lock code (default 123). The instrument returns to the normal display with the keypad unlocked.

4.19 DEFAULT PARAMETER VALUES

It is sometimes desirable to reset instrument parameters to their default values or erase the contents of user curve memory. This data is stored in nonvolatile memory called NOVRAM. The instrument allows parameter and curve data locations in NOVRAM to be cleared independently. Instrument calibration is not affected by this operation. Firmware version dates for both main and input firmware are also displayed during this sequence.

To clear NOVRAM memory or view firmware revision dates press and hold the **Escape** key for 5 seconds. The following screen appears to show the main firmware revision date and as a prompt for returning the instrument parameters to default values. Default parameter values are listed in Table 4-1.

```
Main Code: 03/02/2001

Select With ▲▼

Default Values: No
```

Use the ▲▼ keys to select Yes for default values and No to continue without changing the parameter values. Press **Enter** to accept the new selection and continue to the next setting screen. Press **Escape** to cancel the new selection and return to the normal display.

Default Parameter Values (Continued)

The next screen appears to show the input firmware revision date and as a prompt for clearing user curve memory.

```
Input Code: 1.0

Select With ▲▼
Clear Curves: No
```

Use the ▲▼ keys to select Yes to clear curves and No to continue without clearing. Press **Enter** to accept the new selection and return to the normal display. Press **Escape** to cancel the new selection and return to the normal display.

Table 4-1. Default Parameter Values

Alarm and Relay	
Alarm	Off
Alarm Audible	Off
Relay Low	Off
Relay High	Off
Analog Output	
Analog Output 1	Off
Analog Output 2	Off
Computer Interface	
Baud	9600
IEEE Address	12
IEEE Terminators	CR/LF
Control Setup	
Control Channel	1
Setpoint Units	Ohms
Control Mode	Open
Heater Range Limit	100 mA
Setpoint Change Pause Time	25 sec
Control Filter	Off
Heater Display	Current
Setpoint Ramp	Off
Heater Resistance	100 ohm
Heater Polarity	Unipolar
Display Format	
Number of Locations	1
Location 1 Channel	Scan
Location 1 Data Source	Ohms
Display Resolution	6
Brightness	75%
Excitation and Range	
Excitation Mode	Voltage
Excitation	632 mV
Resistance Range	63.2 Mohm
Autorange	Off
Input Setup	
Scan Channel	1
Autoscan	Off
Scan Dwell Time	10 sec
Change Pause Time	3 sec
Curve Number	No Curve
Temperature Coefficient	Neg
Channel	On
Heater	
Heater Range	Off
Instrument Setup	
Frequency	13.7 Hz
Common Mode Reduction	On
Guard Drive	Off
Keypad Locking	
Mode	Unlocked
Lock Code	123
Linear and Filter	
Channel	1
Equation	MX+B
Slope (M)	1.0000
X Source	Ohms
B Source	Value
Offset (B)	0.0000
Filter	Off
PID and Manual Heater Setting	
Proportional (P)	10
Integral (I)	20 sec
Derivative (D)	0 sec
Manual	0.000%
Remote/Local	
Remote/Local	Local
Setpoint	
Setpoint Value	0.0000
Zone Settings – All Channels	
Setpoint Limit	0.000 K
Proportional (P)	10
Integral (I)	20 sec
Derivative (D)	0 sec
Manual Output	0.000%
Heater Range	Off
Relay Low	Off
Relay High	Off
Analog Output 1	0.00%
Analog Output 2	0.00%

CHAPTER 5

ADVANCED OPERATION

5.0 GENERAL

This chapter provides information on advanced data entry operations for the Model 370 including curve entry and the zone feature.

5.1 CURVE NUMBERS AND STORAGE

The Model 370 has 20 user curve locations numbered 1 thru 20. Each location can hold from 2 to 200 data pairs (breakpoints) including a value in ohms or log ohms and a corresponding temperature value in Kelvin. The curves are stored in nonvolatile memory and retained when power is turned off. Using fewer than 200 breakpoints will not increase the number of available curve locations. CalCurves can be stored as user curves for Lake Shore calibrated sensors. The Model 370 does not include any standard temperature response curves. If temperature sensors that follow a standard curve are used with the instrument, that curve must be entered as a user curve.

5.1.1 Curve Header Parameters

Each curve has a set of parameters used for identification and to allow the instrument to use the curve effectively. The parameters must be set correctly before a curve can be used for temperature conversion or temperature control.

Curve Number: 1 thru 20

Name: Defaults to the name **User Curve** for front panel entry. When entering a user curve over the computer interface, a unique curve name of up to 15 characters can be entered.

Serial Number: Up to a 10-characters can be entered as a sensor serial number. Both numbers and letters can be entered over computer interface; only numbers can be entered from the front panel.

Format: The format parameter tells the instrument what breakpoint data format to expect. Different sensor types require different formats. Formats for Lake Shore sensors are:

Log Ω/K: Log Resistance vs. Kelvin for germanium or other NTC sensors.

Ω/K: Resistance vs. Kelvin for platinum RTD or other PTC sensors.

Limit: Temperature control setpoint limit in Kelvin. Default is 375 K. Enter a setting of 9999 K if no limit is needed.

Temperature Coefficient: The unit derives the temperature coefficient from the first two breakpoints. The user does not enter this setting. Check for proper entry of the first two breakpoints if the temperature coefficient is not correct. A positive coefficient (**P**) indicates that the sensor signal increases with increasing temperature. A negative coefficient (**N**) indicates that the sensor signal decreases with increasing temperature.

5.1.2 Curve Breakpoints

Temperature response data of a calibrated sensor must be reduced to a table of breakpoints before entering it into the instrument. Each breakpoint consists of one sensor value in ohms or log ohms and one temperature value in Kelvin. The instrument uses linear interpolation to calculate temperature between breakpoints. From 2 to 200 breakpoints can be entered as a curve. The instrument will show an error message on the display if the sensor input is outside the range of the breakpoints. No special endpoints are required. Sensor units are defined by the format setting in Table 5-2.

Breakpoint setting resolution is six digits in temperature. Most temperature values are entered with 0.001 resolution. Temperature values of 1000 K and greater can be entered to 0.01 resolution. Temperature values below 10 K can be entered with 0.0001 resolution. Temperature range for curve entry is 0 to 1500 K.

Setting resolution is also six digits in sensor units. The curve format parameter defines the range and resolution for sensor units data entry. The sensor type determines the practical setting resolution. Table 5-2 lists recommended sensor units resolutions for some popular Lake Shore sensors.

The breakpoints should be entered with the resistance value increasing as point number increases. There should not be any breakpoint locations left blank in the middle of a curve. The search routine in the Model 370 interprets a blank breakpoint as the end of the curve.

5.1.3 CalCurve™

The CalCurve service provides the user with a convenient way get the temperature response curve from Lake Shore calibrated sensors into instruments like the Model 370. It can be performed at the factory when calibrated sensors and instruments are ordered together. The factory installed CalCurve option is Model 8001-370 and should be ordered with a calibrated sensor. A CalCurve can be done in the field when additional or replacement sensors are installed. Curve data is loaded into some type of non-volatile memory that is installed into the instrument by the user. In the case of the Model 370, the curve is loaded into a non-volatile memory, which can be installed into the instrument. The field installed version is a Model 8002-05-370 and should be ordered with a calibrated sensor. Customers that have a PC-compatible computer with an RS-232C or IEEE-488 interface have another option. The Model 8000 is included with the calibrated sensor and can be loaded by the user. Lake Shore offers a free curve loading program that is compatible with Model 8000 CalCurves.

5.2 FRONT PANEL CURVE ENTRY OPERATIONS

There are three operations associated with front panel curve entry: Edit curve, Copy curve and Erase curve as detailed below. Similar operations are available over computer interface.

Edit Curve	Edit allows the user to enter or edit a curve at any user curve location.	Refer to Paragraph 5.2.1
Erase Curve	Erase allows the user to delete a curve from any user curve location.	Refer to Paragraph 5.2.2
Copy Curve	Copy allows the user to copy a curve from any location to any other curve location.	Refer to Paragraph 5.2.3

5.2.1 Edit Curve

The Edit Curve operation is used to enter a new curve or edit an existing user curve. Any user curves (1 to 20) can be changed. Entering the identification parameters associated with the curve is as important as entering the breakpoints. Curve header parameters are listed in Table 5-1. Typical parameters for common sensors are listed in Table 5-2. Read this section completely and gather all necessary data before beginning the process.

NOTE: If the curve you wish to enter has similar parameters to an existing curve, first copy the similar curve (as described in Paragraph 5.2.3) to a new location, then edit the curve to the desired parameters.

Table 5-1. Curve Header Parameters

Name	The curve name cannot be changed from the front panel. Curve names can only be entered over the computer interface (up to 15 characters). The default curve name is User Curve xx, where xx is the curve number.
Serial Number	Specific sensors serial numbers (up to 10 characters). The serial number field accepts both numbers and letters over computer interface, but the instrument front panel enters only numbers. The default is blank.
Curve Format	The instrument must know the data format of the curve breakpoints. Different sensor types use different data formats. The sensor inputs require one of the formats below. The range and resolution specified are not always available at the same time. Practical range and resolution depend on the sensor type. ***Format*** — ***Description*** — ***Sensor Units Full Scale Range*** — ***Sensor Units Maximum Resolution*** Ω/K — Resistance vs. Kelvin — 10 k (Ω) — 0.001 (Ω) log R/K — log Resistance vs. Kelvin — 7 (log R) — 0.00001 (log R)
Setpoint Limit	A setpoint temperature limit can be included with every curve. When controlling in temperature, the setpoint cannot exceed the limit entered with the curve for the control sensor. The default is 375 K. Set to 9999 K if no limit is required.
Temperature Coefficient	The instrument derives the temperature coefficient from the first two breakpoints. If set improperly, check the first 2 breakpoints. A positive coefficient indicates the sensor signal increases with increasing temperature. A negative coefficient indicates the sensor signal decreases with increasing temperature.

Table 5-2. Recommended Curve Parameters

Type	Typical Lake Shore Model	Units	Format	Limit (K)	Coefficient	Recommended Resolution
Platinum 100	PT-100	Ohms	Ω/K	800	Positive	0.001 (Ω)
Platinum 1000	PT-100	Ohms	Ω/K	800	Positive	0.01 (Ω)
Rhodium-Iron	RF-100	Ohms	Ω/K	325	Positive	0.001 (Ω)
Carbon-Glass	CGR-1-1000	Ohms	logR/K	325	Negative	0.00001 (logR)
Cernox	CX-1030	Ohms	logR/K	325	Negative	0.00001 (logR)
Germanium	GR-200A-100	Ohms	logR/K	325	Negative	0.00001 (logR)
Rox	RX-102A	Ohms	logR/K	40	Negative	0.00001 (logR)

To enter a new curve or edit an existing curve press **Curve Entry**. The first curve entry screen appears as a prompt for the curve function.

```
Curve Entry

Select With ▲▼

Curve: Edit
```

Use the ▲ or ▼ key to select Edit. Press **Enter** to accept the new selection and continue to the next setting screen. Press **Escape** to cancel the new selection and return to the normal display.

The next curve entry screen appears as a prompt for the number of the curve to edit. The curve name and serial number are displayed below the curve number when available. Curve name cannot be changed from the front panel.

```
Curve Entry
Edit Curve

Select With ▲▼

Curve Number: 1
User Curve: 01
```

Use the ▲ or ▼ key to select a curve number from 1 to 20. Press **Enter** to accept the new selection and continue to the next setting screen. Press **Escape** to cancel the new selection and return to the normal display.

The next curve entry screen appears as a prompt for the sensor serial number. Only numeric serial numbers can be entered from the front panel.

```
Curve Entry
Edit Curve  1

Enter A Value For

Serial Number: 0123456789
```

Use the data entry keys to enter a serial number of up to 10 numbers. Press **Enter** to accept the new selection and continue to the next setting screen. Press **Escape** to restart the setting sequence and enter a new value. Press **Escape** again to cancel the sequence and return to the normal display.

Edit Curve (Continued)

The next curve entry screen appears as a prompt for the curve format.

```
Curve Entry
Edit Curve  1

Select With ▲▼

Curve Format: Log Ω/K
```

Use the ▲ or ▼ key to select a curve format of Ω/K or Log Ω/K. Press **Enter** to accept the new selection and continue to the next setting screen. Press **Escape** to cancel the new selection and return to the normal display.

The next curve entry screen appears as a prompt for the control setpoint limit. Set to 9999K if no limit is wanted.

```
Curve Entry
Edit Curve  1

Enter A Value For

Setpoint Limit: 375.00  K
```

Use the data entry keys to enter a setpoint limit in Kelvin. Press **Enter** to accept the new selection and continue to the next setting screen. Press **Escape** to restart the setting sequence and enter a new value. Press **Escape** again to cancel the sequence and return to the normal display.

The next curve entry screen that appears is for entering or editing breakpoint data. The operator can scroll up and down the entire list of breakpoints. Breakpoints in the middle of the table can be edited or deleted. New breakpoints can be added between existing ones but they must be entered at the end of the table and the instrument will put them in the proper place. The example below illustrates Curve Number 1, named User Curve 01, Serial Number 0123456789, in log Ω/K format. The first seven breakpoints are shown and the eighth line is ready for the next breakpoint.

```
Curve Entry        1: 1.56441 LΩ  1.2000 K
Edit Curve  1      2: 1.59706 LΩ  1.0950 K
User Curve 01      3: 1.63050 LΩ  1.0000 K
0123456789         4: 1.66000 LΩ  0.9100 K
375.00 K           5: 1.67000 LΩ  0.7500 K
N                  6: 1.70000 LΩ  0.8250 K
                   7: 1.79561 LΩ  0.6700 K
                   8: 0.00000 LΩ  0.0000 K
```

When the breakpoint number is highlighted , use the ▲ or ▼ key to scroll through the breakpoints in the curve. Scrolling will stop at the first zero breakpoint at the bottom of the curve so new breakpoints can be entered. Press the **Enter** key when the desired breakpoint number is highlighted and continue to the resistance field.

When the resistance field is highlighted, use the numerical keypad to enter the applicable resistance value in ohms or log ohms. Press **Enter** to accept the new selection and continue to the temperature field. Press **Escape** to restart the setting sequence and enter a new value. Press **Escape** again to highlight the breakpoint number.

When the temperature field is highlighted, use numerical keypad to enter the applicable temperature in Kelvin. Press **Enter** to accept the new selection and continue to the next breakpoint. Press **Escape** to restart the setting sequence and enter a new value. Press **Escape** again to highlight the breakpoint number.

Similarly enter or edit all breakpoints. When complete, press the **Escape** key while the breakpoint number field is highlighted to exit the curve edit screen and return to the normal display

Edit Curve (Continued)

NOTES:

1. Typing over an existing resistance or temperature will replace that value when you press the **Enter** key.
2. To add a new breakpoint to an existing curve, go to the end of the curve and enter the new values. The new point is automatically put into its proper place in breakpoint sequence.
3. To delete a breakpoint, enter all zeros for both the resistance and temperature.
4. When curve entry is complete, the user must assign the new curve to an input channel. The Model 370 does not automatically assign the new curve to a channel even if there is only one.

5.2.2 Erase Curve

User curves that are no longer needed can be erased. Erase Curve sets all identification parameters to default and blanks all breakpoint values.

To erase an existing curve press **Curve Entry**. The first curve entry screen appears as a prompt for the curve function.

```
Curve Entry

Select With ▲▼

Curve: Erase
```

Use the ▲ or ▼ key to select Erase. Press **Enter** to accept the new selection and continue to the next setting screen. Press **Escape** to cancel the new selection and return to the normal display.

The next curve entry screen appears as a prompt for the number of the curve to erase. The curve name and serial number are displayed below the curve number when available.

```
Curve Entry
Erase Curve

Select With ▲▼

Curve Number: 1
User Curve 01
```

Use the ▲ or ▼ key to select a curve number from 1 to 20. Press **Enter** to accept the new selection and continue to the next setting screen. Press **Escape** to cancel the new selection and return to the normal display.

The next screen appears to make sure curves are not accidentally erased.

```
Curve Entry
Erase Curve  1

Press Escape To Cancel
Or Enter To Erase
```

Press the **Escape** key to cancel or the **Enter** key to erase the selected user curve and return to the normal display.

5.2.3 Copy Curve

Temperature curves can be copied from one location inside the Model 370 to another. This is a good way to make small changes to an existing curve. Curve copy may also be necessary if the user needs the same curve with two different temperature limits. The curve that is copied from is always preserved.

NOTE: The copy routine allows you to overwrite an existing user curve. Please ensure the curve number you are writing to is correct before proceeding with curve copy.

To copy a curve press **Curve Entry**. The first curve entry screen appears as a prompt for the curve function.

```
Curve Entry

Select With ▲▼

Curve: Copy
```

Use the ▲ or ▼ key to select Copy. Press **Enter** to accept the new selection and continue to the next setting screen. Press **Escape** to cancel the new selection and return to the normal display.

The next curve entry screen appears as a prompt for the number of the curve to copy from. The curve name and serial number are displayed below the curve number when available.

```
Curve Entry
Copy Curve

Select With ▲▼

From Curve Number: 1
User Curve 01
```

Use the ▲ or ▼ key to select a curve number from 1 to 20. Press **Enter** to accept the new selection and continue to the next setting screen. Press **Escape** to cancel the new selection and return to the normal display.

The next curve entry screen appears as a prompt for the number of the curve to copy to. The curve name and serial number are displayed below the curve number when available.

```
Curve Entry
Copy Curve

Select With ▲▼

To Curve Number: 1
User Curve 02
```

Use the ▲ or ▼ key to select a curve number from 1 to 20. Press **Enter** to accept the new selection and copy the curve. Press **Escape** to cancel the operation and return to the normal display.

5.3 ZONE TUNING

Optimal closed loop PID control parameters values are often different at varied temperatures within a system. Once values have been chosen for each temperature range or zone, the zone feature can automatically select the correct values each time the setpoint is changed. This mode does not help choose control parameter values; it helps use chosen values more efficiently. Once all zone parameters have been programmed, the controller must be placed in zone tuning mode.

5.3.1 Entering Zone Parameter Values

The Model 370 allows the user to establish up to 10 custom contiguous temperature zones. The user should configure the zones using zone 1 for the lowest temperature and zone 10 for the highest temperature. Zone boundaries are always specified in Kelvin (K) and the upper limit of each zone acts as the lower limit of the next zone. The bottom of the first zone is always 0 K, therefore, only the upper setpoint limit is required to identify each zones. Make a copy of Figure 5-1 to plan your zones before entering.

Each zone includes control parameters of P, I, D, Manual Output and heater range. Manual settings for both analog voltage outputs and both relays can also be controlled with the zone feature if those features are put into zone mode.

To enter parameter values into the zone table press **Zone Setup**. The first zone setup screen appears as a prompt for the zone number.

```
Zone Setup

Select With ▲▼

Zone: 1
```

Use the ▲ or ▼ key to select a zone from 1 to 10. Press **Enter** to accept the new selection and continue to the next setting screen. Press **Escape** to cancel the new selection and return to the normal display.

The next zone setup screen appears as a prompt for the setpoint value that is the top of the zone.

```
Zone Setup
Zone  1

Enter A Value For

Setpoint: 0.00000 mK
```

Use the data entry keys to enter a setpoint value. Enter the numeric value first. Press **Enter** to accept the new value and advance to the units multiplier. Use the ▲ or ▼ key to select a units multiplier of m, blank, k. Press **Enter** to accept the new selection and return to the normal display. Press **Escape** to restart the setting sequence and enter a new value. Press **Escape** again to cancel the sequence and return to the normal display.

The next zone setup screen appears as a prompt for the proportional (P) value.

```
Zone Setup
Zone  1

Enter A Value For

Proportional (P): 10.000
```

Use the data entry keys to enter a proportional value between 0.001 and 1000. Press **Enter** to accept the new selection and continue to the next setting screen. Press **Escape** to restart the setting sequence and enter a new value. Press **Escape** again to cancel the sequence and return to the normal display.

Entering Zone Parameter Values (Continued)

The next zone setup screen appears as a prompt for the integral (I) value.

```
Zone Setup
Zone  1

Enter A Value For

Integral (I): 20.000
```

Use the data entry keys to enter an integral value between 1 and 10,000 or zero for off. Press **Enter** to accept the new selection and continue to the next setting screen. Press **Escape** to restart the setting sequence and enter a new value. Press **Escape** again to cancel the sequence and return to the normal display.

The next zone setup screen appears as a prompt for the derivative (D) value.

```
Zone Setup
Zone  1

Enter A Value For

Derivative (D): 0.0000
```

Use the data entry keys to enter a derivative value between 1 and 2500 or zero for off. Press **Enter** to accept the new selection and return to the normal display. Press **Escape** to restart the setting sequence and enter a new value. Press **Escape** again to cancel the sequence and return to the normal display.

The next zone setup screen appears as a prompt for the manual heater output value. Manual output must be entered in percent of full-scale current. Power units are not available within the zone feature.

```
Zone Setup
Zone  1

Enter A Value For

Manual Output: 0.0000 %
```

Use the data entry keys to enter a manual output value between 0 and 100%. The units multiplier is determined by the heater range and can not be changed. Press **Enter** to accept the new selection and return to the normal display. Press **Escape** to restart the setting sequence and enter a new value. Press **Escape** again to cancel the sequence and return to the normal display.

The next zone setup screen appears as a prompt for the heater range. Heater ranges are entered by their full-scale current. Power units are not available within the zone feature.

```
Zone Setup
Zone  1

Select With ▲▼

Heater Range: Off
```

Use the ▲ or ▼ key to select on or off. Press **Enter** to accept the new selection and continue to the next setting screen. Press **Escape** to cancel the new selection and return to the normal display.

Entering Zone Parameter Values (Continued)

The next zone setup screen appears as a prompt for the low relay setting. This setting is only used if the relay is set to zone mode.

```
Zone Setup
Zone  1

Select With ▲▼

Low Relay: Off
```

Use the ▲ or ▼ key to select on or off. Press **Enter** to accept the new selection and continue to the next setting screen. Press **Escape** to cancel the new selection and return to the normal display.

The next zone setup screen appears as a prompt for the high relay setting. This setting is only used if the relay is set to zone mode.

```
Zone Setup
Zone  1

Select With ▲▼

High Relay: Off
```

Use the ▲ or ▼ key to select on or off. Press **Enter** to accept the new selection and continue to the next setting screen. Press **Escape** to cancel the new selection and return to the normal display.

The next zone setup screen appears as a prompt for the Analog Output 1 manual output value. This setting is only used if the analog output is set to zone mode.

```
Zone Setup
Zone  1

Enter A Value For

Analog Out 1: +0.0000
```

Use the data entry keys to enter a manual output value –100 % and +100% in bipolar mode or 0 and +100% in unipolar mode. Press **Enter** to accept the new selection and continue to the next setting screen. Press **Escape** to restart the setting sequence and enter a different value. Press **Escape** again to cancel the sequence and return to the normal display.

The next zone setup screen appears as a prompt for the Analog Output 2 manual output value. This setting is only used if the analog output is set to zone mode.

```
Zone Setup
Zone  1

Enter A Value For

Analog Out 2: +0.0000
```

Use the data entry keys to enter a manual output value –100 % and +100% in bipolar mode or 0 and +100% in unipolar mode. Press **Enter** to accept the new selection and return to the normal display. Press **Escape** to restart the setting sequence and enter a different value. Press **Escape** again to cancel the sequence and return to the normal display.

Repeat this process for up to ten zones. Not all zones have to be used but they must start at Zone 1 with no blank zones in the middle of the table.

5.3.2 Using Zone Tuning

Once all zone parameters have been programmed, the controller must be placed in zone tuning mode. When in zone tuning mode, the instrument will update the control settings each time the setpoint is changed to a new zone. If the settings are changed manually, the controller will use the new setting while it is in the same zone and update to the zone table settings when the setpoint is changed to a value outside that zone. If a setpoint value is entered that is greater than the setpoint limit in zone 10, the instrument will use the parameter values from zone 10. Select closed loop PID control mode to turn zone tuning off.

To select zone tuning mode press **Control Setup**. The first control setup screen appears as a prompt for the control mode.

```
Control Setup

Select With ▲▼
Control Mode: Zone Tuning
```

Use the ▲ or ▼ key to select Zone. Press **Enter** to accept the new selection and continue to the next setting screen. Press **Escape** to cancel the new selection and return to the normal display.

Zone Setting Work Sheet

Zone 10									Setpoint: _____	K
	P (0.1-1k)	I (0.1-1k)	D (0-200)	Manual Output (0-100%)	Heater Range	Low Relay	High Relay	Analog Out1 (0-100%)	Analog Out2 (0-100%)	
	_____	_____	_____	_____	_____	On/Off	On/Off	_____	_____	
Zone 09									Setpoint: _____	K
	P (0.1-1k)	I (0.1-1k)	D (0-200)	Manual Output (0-100%)	Heater Range	Low Relay	High Relay	Analog Out1 (0-100%)	Analog Out2 (0-100%)	
	_____	_____	_____	_____	_____	On/Off	On/Off	_____	_____	
Zone 08									Setpoint: _____	K
	P (0.1-1k)	I (0.1-1k)	D (0-200)	Manual Output (0-100%)	Heater Range	Low Relay	High Relay	Analog Out1 (0-100%)	Analog Out2 (0-100%)	
	_____	_____	_____	_____	_____	On/Off	On/Off	_____	_____	
Zone 07									Setpoint: _____	K
	P (0.1-1k)	I (0.1-1k)	D (0-200)	Manual Output (0-100%)	Heater Range	Low Relay	High Relay	Analog Out1 (0-100%)	Analog Out2 (0-100%)	
	_____	_____	_____	_____	_____	On/Off	On/Off	_____	_____	
Zone 06									Setpoint: _____	K
	P (0.1-1k)	I (0.1-1k)	D (0-200)	Manual Output (0-100%)	Heater Range	Low Relay	High Relay	Analog Out1 (0-100%)	Analog Out2 (0-100%)	
	_____	_____	_____	_____	_____	On/Off	On/Off	_____	_____	
Zone 05									Setpoint: _____	K
	P (0.1-1k)	I (0.1-1k)	D (0-200)	Manual Output (0-100%)	Heater Range	Low Relay	High Relay	Analog Out1 (0-100%)	Analog Out2 (0-100%)	
	_____	_____	_____	_____	_____	On/Off	On/Off	_____	_____	
Zone 04									Setpoint: _____	K
	P (0.1-1k)	I (0.1-1k)	D (0-200)	Manual Output (0-100%)	Heater Range	Low Relay	High Relay	Analog Out1 (0-100%)	Analog Out2 (0-100%)	
	_____	_____	_____	_____	_____	On/Off	On/Off	_____	_____	
Zone 03									Setpoint: _____	K
	P (0.1-1k)	I (0.1-1k)	D (0-200)	Manual Output (0-100%)	Heater Range	Low Relay	High Relay	Analog Out1 (0-100%)	Analog Out2 (0-100%)	
	_____	_____	_____	_____	_____	On/Off	On/Off	_____	_____	
Zone 02									Setpoint: _____	K
	P (0.1-1k)	I (0.1-1k)	D (0-200)	Manual Output (0-100%)	Heater Range	Low Relay	High Relay	Analog Out1 (0-100%)	Analog Out2 (0-100%)	
	_____	_____	_____	_____	_____	On/Off	On/Off	_____	_____	
Zone 01									Setpoint: _____	K
	P (0.1-1k)	I (0.1-1k)	D (0-200)	Manual Output (0-100%)	Heater Range	Low Relay	High Relay	Analog Out1 (0-100%)	Analog Out2 (0-100%)	
	_____	_____	_____	_____	_____	On/Off	On/Off	_____	_____	
0 K										0 K

Zone Worksheet.eps

Figure 5-1. Record of Zone Settings

This Page Intentionally Left Blank

CHAPTER 6

COMPUTER INTERFACE OPERATION

6.0 GENERAL

This chapter provides operational instructions for the computer interface for the Lake Shore Model 370 AC Resistance Bridge. Either of the two computer interfaces provided with the Model 370 permit remote operation. The first is the IEEE-488 Interface described in Paragraph 6.1. The second is the Serial Interface described in Paragraph 6.2. The two interfaces share a common set of commands detailed in Paragraph 6.3. Only one of the interfaces can be used at a time.

6.1 IEEE-488 INTERFACE

The IEEE-488 Interface is an instrumentation bus with hardware and programming standards that simplify instrument interfacing. The Model 370 IEEE-488 Interface complies with the IEEE-488.2-1987 standard and incorporates its functional, electrical, and mechanical specifications unless otherwise specified in this manual.

All instruments on the interface bus perform one or more of the interface functions of TALKER, LISTENER, or BUS CONTROLLER. A TALKER transmits data onto the bus to other devices. A LISTENER receives data from other devices through the bus. The BUS CONTROLLER designates to the devices on the bus which function to perform. The Model 370 performs the functions of TALKER and LISTENER but cannot be a BUS CONTROLLER. The BUS CONTROLLER is the digital computer which tells the Model 370 which functions to perform.

Below are Model 370 IEEE-488 interface capabilities:

- **SH1:** Source handshake capability.
- **RL1:** Complete remote/local capability.
- **DC1:** Full device clear capability.
- **DT0:** No device trigger capability.
- **C0:** No system controller capability.
- **T5:** Basic TALKER, serial poll capability, talk only, unaddressed to talk if addressed to listen.
- **L4:** Basic LISTENER, unaddressed to listen if addressed to talk.
- **SR1:** Service request capability.
- **AH1:** Acceptor handshake capability.
- **PP0:** No parallel poll capability.
- **E1:** Open collector electronics.

NOTE: The Model 370 IEEE-488 Interface requires that repeat addressing be enabled on the bus controller.

Instruments are connected to the IEEE-488 bus by a 24-conductor connector cable as specified by the standard. Refer to Paragraph 8.11.2. Cables can be purchased from Lake Shore or other electronic suppliers. A connector extender (Model 4005) is required to use the IEEE-488 Interface and the ALARM RELAYS terminal block at the same time.

Cable lengths are limited to 2 meters for each device and 20 meters for the entire bus. The Model 370 can drive bus with up to 10 loads. If more instruments or cable length is required, a bus expander must be used.

6.1.1 Changing IEEE-488 Interface Parameters

Two interface parameters. address and terminators, must be set from the front panel before communication with the instrument can be established. Other interface parameters can be set via the interface using the device specific commands provided in Paragraph 6.3.

Changing IEEE-488 Interface Parameters (Continued)

To set the IEEE-488 parameters, press the **Computer Interface** key and press **Enter** to skip past Serial Interface Baud Rate. The following computer interface screen appears as a prompt for the IEEE-488 address.

```
Computer Interface

Select With ▲▼
IEEE Address: 12
```

Use the ▲ or ▼ key to select an address between 1 and 30. The default is twelve. Press **Enter** to accept the new selection and continue to the next setting screen. Press **Escape** to cancel the new selection and return to the normal display. The next computer interface screen appears as a prompt for the IEEE-488 terminators.

```
Computer Interface

Select With ▲▼
Term: Cr Lf
```

Use the ▲ or ▼ key to select one of the following terminators: CR/LF, LF/CR, LF, and EOI. The default is Cr Lf. Press **Enter** to accept the new selection and continue to the next setting screen. Press **Escape** to cancel the new selection and return to the normal display.

6.1.2 Remote/Local Operation

Normal operations from the keypad are referred to as 'Local' operations. The Model 370 can also be configured for 'Remote' operations via the IEEE-488 interface or the **Local** key. The **Local** key will toggle between 'Remote' and 'Local' operations. During 'Remote' operations, the Remote annunciator will appear in the upper right corner of the display and operations from the keypad will be disabled.

6.1.3 IEEE-488 Command Structure

The Model 370 supports several command types. These commands are divided into three groups.

1. **Bus Control** – Refer to Paragraph 6.1.3.1.
   a. Universal
      (1) Uniline
      (2) Multiline
   b. Addressed Bus Control
2. **Common** – Refer to Paragraph 6.1.3.2.
3. **Device Specific** – Refer to Paragraph 6.1.3.3.
4. **Message Strings** – Refer to Paragraph 6.1.3.4.

6.1.3.1 Bus Control Commands

A Universal Command addresses all devices on the bus. Universal Commands include Uniline and Multiline Commands. A Uniline Command (Message) asserts only a single signal line. The Model 370 recognizes two of these messages from the BUS CONTROLLER: **Remote (REN)** and **Interface Clear (IFC)**. The Model 370 sends one Uniline Command: **Service Request (SRQ)**.

REN (Remote) – Puts the Model 370 into remote mode.

IFC (Interface Clear) – Stops current operation on the bus.

SRQ (Service Request) – Tells the bus controller that the Model 370 needs interface service.

Bus Control Commands (Continued)

A Multiline Command asserts a group of signal lines. All devices equipped to implement such commands do so simultaneously upon command transmission. These commands transmit with the Attention (ATN) line asserted low. The Model 370 recognizes two Multiline commands:

LLO (Local Lockout) – Prevents the use of instrument front panel controls.

DCL (Device Clear) – Clears Model 370 interface activity and puts it into a bus idle state.

Finally, Addressed Bus Control Commands are Multiline commands that must include the Model 370 listen address before the instrument responds. Only the addressed device responds to these commands. The Model 370 recognizes three of the Addressed Bus Control Commands:

SDC (Selective Device Clear) – The SDC command performs essentially the same function as the DCL command except that only the addressed device responds.

GTL (Go To Local) – The GTL command is used to remove instruments from the remote mode. With some instruments, GTL also unlocks front panel controls if they were previously locked out with the LLO command.

SPE (Serial Poll Enable) and **SPD (Serial Poll Disable)** – Serial polling accesses the Service Request Status Byte Register. This status register contains important operational information from the unit requesting service. The SPD command ends the polling sequence.

6.1.3.2 Common Commands

Common Commands are addressed commands which create commonalty between instruments on the bus. All instruments that comply with the IEEE-488 1987 standard share these commands and their format. Common commands all begin with an asterisk. They generally relate to "bus" and "instrument" status and identification. Common query commands end with a question mark (?). Model 370 common commands are detailed in Paragraph 6.3 and summarized in Table 6-6.

6.1.3.3 Device Specific Commands

Device specific commands are addressed commands. The Model 370 supports a variety of device specific commands to program instruments remotely from a digital computer and to transfer measurements to the computer. Most device specific commands perform functions also performed from the front panel. Model 370 device specific commands are detailed in Paragraph 6.3 and summarized in Table 6-6.

6.1.3.4 Message Strings

A message string is a group of characters assembled to perform an interface function. There are three types of message strings: commands, queries and responses. The computer issues command and query strings through user programs, the instrument issues responses. Two or more command strings can be chained together in one communication but they must be separated by a semi-colon (;). Only one query is permitted per communication but it can be chained to the end of a command. The total communication string must not exceed 64 characters in length.

A command string is issued by the computer and instructs the instrument to either perform a function or change a parameter setting. When a command is issued, the computer is acting as 'talker' and the instrument as 'listener'. The format is:

```
<command mnemonic><space><parameter data><terminators>.
```

Command mnemonics and parameter data necessary for each one is described in Paragraph 6.3. Terminators must be sent with every message string.

A query string is issued by the computer and instructs the instrument which response to send. Queries are issued similar to commands with the computer acting as 'talker' and the instrument as 'listener'. The query format is:

```
<query mnemonic><?><space><parameter data><terminators>.
```

Query mnemonics are often the same as commands with the addition of a question mark. Parameter data is often unnecessary when sending queries. Query mnemonics and parameter data if necessary is described in Paragraph 6.3. Terminators must be sent with every message string. Issuing a query does not initiate a response from the instrument.

A response string is sent by the instrument only when it is addressed as a 'talker' and the computer becomes the 'listener'. The instrument will respond only to the last query it receives. The response can be a reading value, status report or the present value of a parameter. Response data formats are listed along with the associated queries in Paragraph 6.3.

6.1.4 Status Registers

There are two status registers: the Status Byte Register described in Paragraph 6.1.4.1, and the Standard Event Status Register in Paragraph 6.1.4.2.

6.1.4.1 Status Byte Register and Service Request Enable Register

The Status Byte Register contains six bits of information about the operation of the Model 370.

STATUS BYTE REGISTER FORMAT

Bit –	7	6	5	4	3	2	1	0
Weighting –	128	64	32	16	8	4	2	1
Bit Name –	Ramp Done	SRQ	ESB	Error	Alarm	Valid Read	Not Used	Not Used

If Service Request is enabled, any of these bits being set will cause the Model 370 to pull the SRQ management line low to signal the BUS CONTROLLER. These bits are reset to zero upon a serial poll of the Status Byte Register. These reports can be inhibited by turning their corresponding bits in the Service Request Enable Register to off.

The Service Request Enable Register allows the user to inhibit or enable any of the status reports in the Status Byte Register. The ✱SRE command is used to set the bits. If a bit in the Service Request Enable Register is set (1), then that function is enabled. Refer to the ✱SRE command discussion.

Ramp Done, Bit (7) – This bit is set when a ramp is completed.

Service Request (SRQ) Bit (6) – Determines whether the Model 370 is to report via the SRQ line. If bits 2, 3, 4, 5 and/or 7 are set, then the corresponding bit in the Status Byte Register will be set. The Model 370 will produce a service request only if bit 6 of the Service Request Enable Register is set. If disabled, the Status Byte Register can still be read by the BUS CONTROLLER by means of a serial poll (SPE) to examine the status reports, but the BUS CONTROLLER will not be interrupted by the Service Request. The ✱STB common command will read the Status Byte Register but will not clear the bits.

Standard Event Status (ESB), Bit (5) – When bit 5 is set, it indicates if one of the bits from the Standard Event Status Register has been set. (Refer to Paragraph 6.1.4.2.)

Error, Bit (4) – This bit is set when there is an instrument error not related to the bus. The following errors can trigger this bit to be set: CS OVL, VCM OVL, VDIF OVL, VMIX OVL, R. OVER, R. UNDER, T. OVER, T. UNDER, Refer to Paragraph 8.6 for a description of error messages.

Alarm, Bit (3) – This bit is set when there is an alarm condition.

Valid Read, Bit (2) – This bit is set when each valid reading is taken.

6.1.4.2 Standard Event Status Register and Standard Event Status Enable Register

The Standard Event Status Register reports IEEE bus status of the Model 370.

STANDARD EVENT STATUS REGISTER FORMAT

Bit –	7	6	5	4	3	2	1	0
Weighting –	128	64	32	16	8	4	2	1
Bit Name –	PON	Not Used	CME	EXE	Not Used	QYE	Not Used	OPC

Bits 1,3, and 6 are not used. The bus controller will only be interrupted with the reports of this register if the bits have been enabled in the Standard Event Status Enable Register and if bit 5 of the Service Request Enable Register has been set.

The Standard Event Status Enable Register allows the user to enable any of the Standard Event Status Register reports. The Standard Event Status Enable command (✱ESE) sets the Standard Event Status Enable Register bits. If a bit of this register is set, then that function is enabled. To set a bit, send the command ✱ESE with the bit weighting for each bit you want to be set added together. See the ✱ESE command discussion for further details.

Standard Event Status Register and Standard Event Status Enable Register (Continued)

The Standard Event Status Enable Query, ✱ESE?, reads the Standard Event Status Enable Register. ✱ESR? reads the Standard Event Status Register. Once this register has been read, all of the bits are reset to zero.

Power On (PON), Bit (7) – This bit is set to indicate an instrument off-on transition.

Command Error (CME), Bit (5) – This bit is set if a command error has been detected since the last reading. This means that the instrument could not interpret the command due to a syntax error, an unrecognized header, unrecognized terminators, or an unsupported command.

Execution Error (EXE), Bit (4) – This bit is set if an execution error has been detected. This occurs when the instrument is instructed to do something not within its capabilities.

Query Error (QYE), Bit (2) – This bit indicates a query error. It occurs rarely and involves loss of data because the output queue is full.

Operation Complete (OPC), Bit (0) – This bit is generated in response to the ✱OPC common command. It indicates when the Model 370 has completed all selected pending operations. It is not related to the ✱OPC? command, which is a separate interface feature.

6.1.5 IEEE Interface Example Programs

A Visual Basic program is included to illustrate the IEEE-488 communication functions of the instrument. Instructions for setting up the IEEE-488 board is included in Section 6.1.5.1. Refer to Section 6.1.5.2 for instructions on how to setup the program. The Visual Basic code is provided in Table 6-2. A description of program operation is provided in Section 6.1.5.3. While the hardware and software required to produce and implement these programs is not included with the instrument, the concepts illustrated apply to most applications.

6.1.5.1 IEEE-488 Interface Board Installation for Visual Basic Program

This procedure works for Plug and Play GPIB Hardware and Software for Windows 98/95. This example uses the AT-GPIB/TNT GPIB card.

1. Install the GPIB Plug and Play Software and Hardware using National Instruments instructions.
2. Verify that the following files have been installed to the Windows System folder:
   a. gpib-32.dll
   b. gpib.dll
   c. gpib32ft.dll

   Files b and c support any 16-bit Windows GPIB applications being used.
3. Locate the following files and make note of their location. These files will be used during the development process of a Visual Basic program.
   a. Niglobal.bas
   b. Vbib-32.bas

NOTE: If the files in Steps 2 and 3 are not installed on your computer, they may be copied from your National Instruments setup disks or they may be downloaded from www.natinst.com.

4. Configure the GPIB by selecting the System icon in the Windows 98/95 Control Panel located under Settings on the Start Menu. Configure the GPIB Settings as shown in Figure 6-1. Configure the DEV12 Device Template as shown in Figure 6-2. Be sure to check the Readdress box.

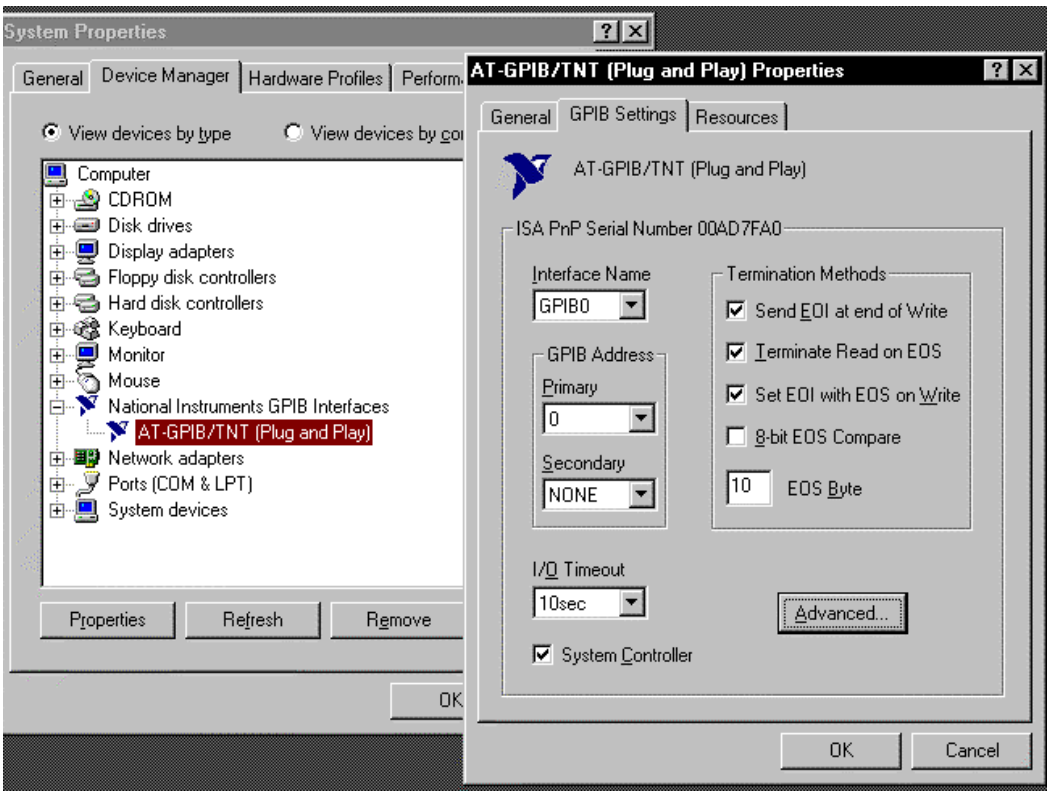

Figure 6-1. GPIB0 Setting Configuration

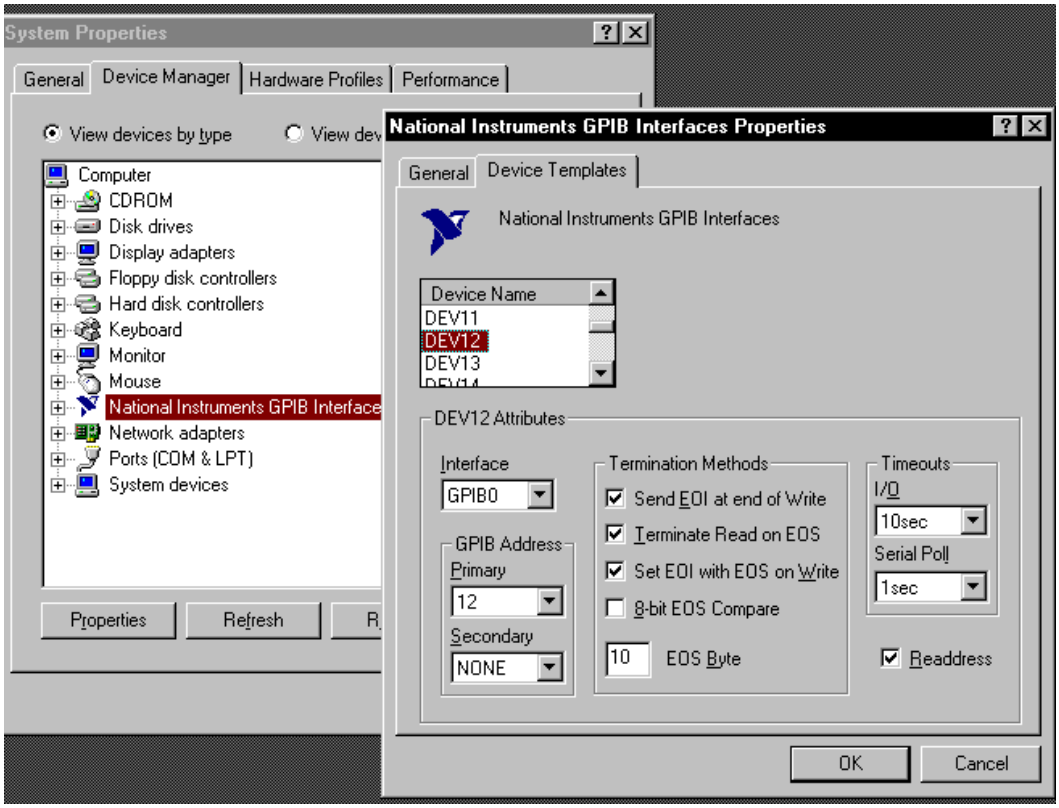

Figure 6-2. DEV 12 Device Template Configuration

6.1.5.2 Visual Basic IEEE-488 Interface Program Setup

This IEEE-488 interface program works with Visual Basic 6.0 (VB6) on an IBM PC (or compatible) with a Pentium-class processor. A Pentium 90 or higher is recommended, running Windows 95 or better. It assumes your IEEE-488 (GPIB) card is installed and operating correctly (refer to Paragraph 6.1.5.1). Use the following procedure to develop the IEEE-488 Interface Program in Visual Basic.

1. Start VB6.
2. Choose Standard EXE and select Open.
3. Resize form window to desired size.
4. On the Project Menu, select Add Module, select the Existing tab, then navigate to the location on your computer to add the following files: Niglobal.bas and Vbib-32.bas.
5. Add controls to form:
   a. Add three Label controls to the form.
   b. Add two TextBox controls to the form.
   c. Add one CommandButton control to the form.
6. On the View Menu, select Properties Window.
7. In the Properties window, use the dropdown list to select between the different controls of the current project.

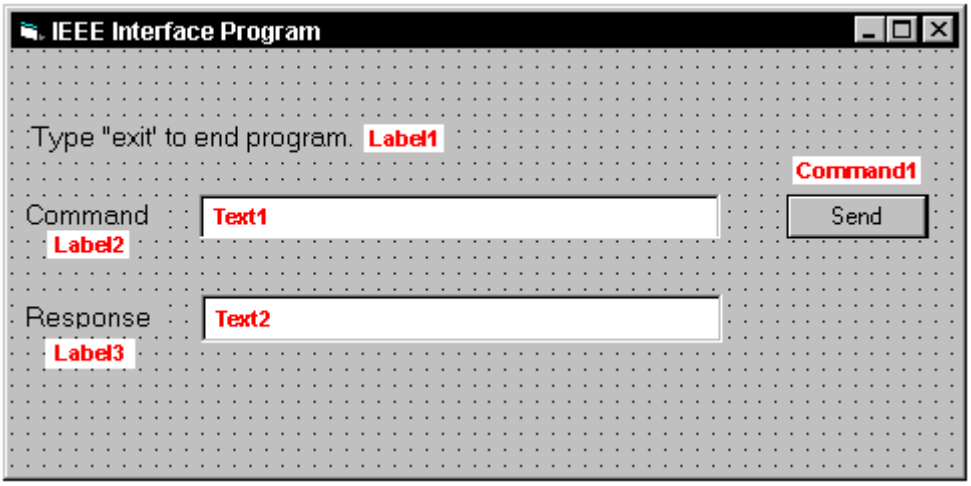

10. Set the properties of the controls as defined in Table 6-1.
11. Save the program.

Table 6-1. IEEE-488 Interface Program Control Properties

Current Name	Property	New Value
Label1	Name Caption	lblExitProgram Type "exit" to end program.
Label2	Name Caption	lblCommand Command
Label3	Name Caption	lblResponse Response
Text1	Name Text	txtCommand <blank>
Text2	Name Text	txtResponse <blank>
Command1	Name Caption Default	cmdSend Send True
Form1	Name Caption	frmIEEE IEEE Interface Program

12. Add code (provided in Table 6-2).
    a. In the Code Editor window, under the Object dropdown list, select (General). Add the statement: Public gSend as Boolean
    b. Double Click on cmdSend. Add code segment under Private Sub cmdSend_Click( ) as shown in Table 6-2.
    c. In the Code Editor window, under the Object dropdown list, select Form. Make sure the Procedure dropdown list is set at Load. The Code window should have written the segment of code: Private Sub Form_Load( ). Add the code to this subroutine as shown in Table 6-2.
13. Save the program.
14. Run the program. The program should resemble the following.

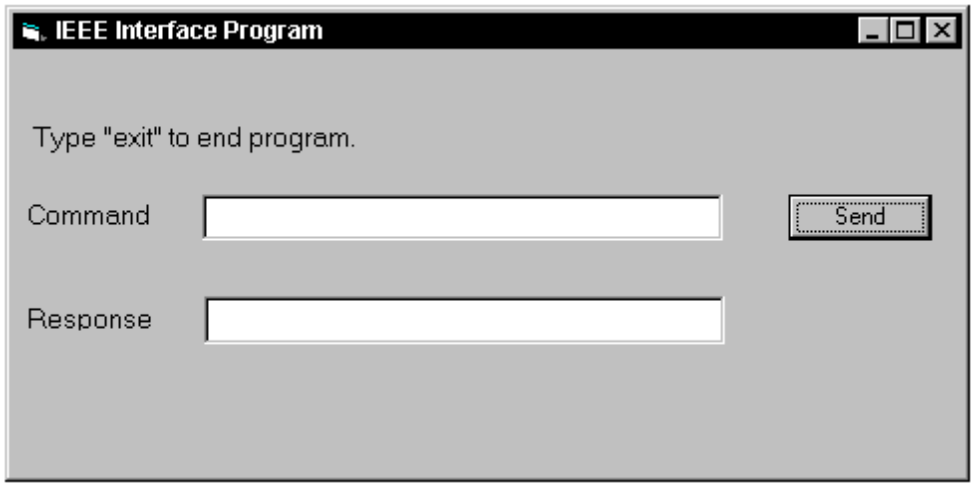

15. Type in a command or query in the Command box as described in Paragraph 6.1.5.5.
16. Press Enter or select the Send button with the mouse to send command.
17. Type Exit and press Enter to quit.

Table 6-2. Visual Basic IEEE-488 Interface Program

```
Public gSend As Boolean                                    'Global used for Send button state
Private Sub cmdSend_Click()                                'Routine to handle Send button press
   gSend = True                                            'Set Flag to True
End Sub
Private Sub Form_Load()                                    'Main code section
   Dim strReturn As String                                 'Used to return response
   Dim term As String                                      'Terminators
   Dim strCommand As String                                'Data string sent to instrument
   Dim intDevice As Integer                                'Device number used with IEEE

   frmIEEE.Show                                            'Show main window
   term = Chr(13) & Chr(10)                                'Terminators are <CR><LF>
   strReturn = ""                                          'Clear return string

   Call ibdev(0, 12, 0, T10s, 1, &H140A, intDevice)        'Initialize the IEEE device
   Call ibconfig(intDevice, ibcREADDR,1)                   'Setup Repeat Addressing
   Do
       Do                                                  'Wait loop
       DoEvents                                            'Give up processor to other events
       Loop Until gSend = True                             'Loop until Send button pressed
       gSend = False                                       'Set Flag as False

       strCommand = frmIEEE.txtCommand.Text                'Get Command
       strReturn = ""                                      'Clear response display

       strCommand = UCase(strCommand)                      'Set all characters to upper case
       If strCommand = "EXIT" Then                         'Get out on EXIT
           End
       End If

       Call ibwrt(intDevice, strCommand & term)            'Send command to instrument
       If (ibsta And EERR) Then                            'Check for IEEE errors
           'do error handling if needed                    'Handle errors here
       End If

       If InStr(strCommand, "?") <> 0 Then                 'Check to see if query
           strReturn = Space(100)                          'Build empty return buffer
           Call ibrd(intDevice, strReturn)                 'Read back response
           If (ibsta And EERR) Then                        'Check for IEEE errors
               'do error handling if needed                'Handle errors here
           End If

           If strReturn <> "" Then                         'Check if empty string
               strReturn = RTrim(strReturn)                'Remove extra spaces and Terminators
               Do While Right(strReturn, 1) = Chr(10) Or Right(strReturn, 1) = Chr(13)
                   strReturn = Left(strReturn, Len(strReturn) - 1)
               Loop
           Else
               strReturn = "No Response"                   'Send No Response
           End If

           frmIEEE.txtResponse.Text = strReturn            'Put response in text on main form
       End If
   Loop
End Sub
```

6.1.5.3 Program Operation

Once the example program is running, try the following commands and observe the response of the instrument. Input from the user is shown in **bold** and terminators are added by the program. The word [term] indicates the required terminators included with the response.

ENTER COMMAND? ***IDN?**	Identification query. Instrument will return a string identifying itself.
RESPONSE: LSCI,MODEL370,123456,02152001[term]	
ENTER COMMAND? **RDGR? 1**	Ohm reading query. Instrument will return a string with the present resistance reading from channel 1.
RESPONSE: +273.150E+00[term]	
ENTER COMMAND? **HTRRNG 0**	Heater range command. Instrument will turn off the heater. No response will be sent.
ENTER COMMAND? **HTRRNG?**	Heater range query. Instrument will return a string with the present heater range setting.
RESPONSE: 0[term]	
ENTER COMMAND? **HTRRNG 1;HTRRNG?**	Heater range command followed by a query. Instrument will change to heater Low setting then return a string
RESPONSE: 1[term]	with the present setting.

The following are additional notes on using either IEEE-488 Interface program.

- If you enter a correctly spelled query without a "**?**," nothing will be returned. Incorrectly spelled commands and queries are ignored. Commands and queries should have a space separating the command and associated parameters.
- Leading zeros and zeros following a decimal point are not needed in a command string, but are sent in response to a query. A leading "+" is not required but a leading "–" *is* required.

6.1.6 Troubleshooting

New Installation

1. Check instrument address.
2. Always send terminators.
3. Send entire message string at one time including terminators.
4. Send only one simple command at a time until communication is established.
5. Be sure to spell commands correctly and use proper syntax.
6. Attempt both 'Talk' and 'Listen' functions. If one works but not the other, the hardware connection is working, so look at syntax, terminators, and command format.
7. If only one message is received after resetting the interface, check the "repeat addressing" setting. It should be enabled.

Old Installation No Longer Working

8. Power instrument off then on again to see if it is a soft failure.
9. Power computer off then on again to see if the IEEE card is locked up.
10. Verify that the address has not been changed on the instrument during a memory reset.
11. Check all cable connections.

Intermittent Lockups

12. Check cable connections and length.
13. Increase delay between all commands to 50 ms to make sure instrument is not being over loaded.

6.2 SERIAL INTERFACE OVERVIEW

The serial interface used in the Model 370 is commonly referred to as an RS-232C interface. RS-232C is a standard of the Electronics Industries Association (EIA) that describes one of the most common interfaces between computers and electronic equipment. The RS-232C standard is quite flexible and allows many different configurations. However, any two devices claiming RS-232C compatibility cannot necessarily be plugged together without interface setup. The remainder of this paragraph briefly describes the key features of a serial interface that are supported by the instrument. A customer supplied computer with similarly configured interface port is required to enable communication.

6.2.1 Changing Baud Rate

To select the Serial Interface Baud Rate press the **Computer Interface** key. The first computer interface screen appears as a prompt for Baud.

```
Computer Interface

Select With ▲▼
Baud: 9600
```

Use the ▲ or ▼ key to select 300, 1200, or 9600 Baud. The default is 9600 Baud. Press **Enter** to accept the new selection and continue to the next setting screen. Press **Escape** to cancel the new selection and return to the normal display.

6.2.2 Physical Connection

The Model 370 has a 9 pin D-Subminiature plug on the rear panel for serial communication. The original RS-232C standard specifies 25 pins but both 9- and 25-pin connectors are commonly used in the computer industry. Many third party cables exist for connecting the instrument to computers with either 9- or 25-pin connectors. Paragraph 8.11.1 gives the most common pin assignments for 9- and 25-pin connectors. Please note that not all pins or functions are supported by the Model 370.

The instrument serial connector is the plug half of a mating pair and must be matched with a socket on the cable. If a cable has the correct wiring configuration but also has a plug end, a "gender changer" can be used to mate two plug ends together.

The letters DTE near the interface connector stand for Data Terminal Equipment and indicate the pin connection of the directional pins such as transmit data (TD) and receive data (RD). Equipment with Data Communications Equipment (DCE) wiring can be connected to the instrument with a straight through cable. As an example, Pin 3 of the DTE connector holds the transmit line and Pin 3 of the DCE connector holds the receive line so the functions complement.

It is likely both pieces of equipment are wired in the DTE configuration. In this case Pin 3 on one DTE connector (used for transmit) must be wired to Pin 2 on the other (used for receive). Cables that swap the complementing lines are called null modem cables and must be used between two DTE wired devices. Null modem adapters are also available for use with straight through cables. Paragraph 8.11.1 illustrates suggested cables that can be used between the instrument and common computers.

The instrument uses drivers to generate the transmission voltage levels required by the RS-232C standard. These voltages are considered safe under normal operating conditions because of their relatively low voltage and current limits. The drivers are designed to work with cables up to 50 feet in length.

6.2.3 Hardware Support

The Model 370 interface hardware supports the following features. Asynchronous timing is used for the individual bit data within a character. This timing requires start and stop bits as part of each character so the transmitter and receiver can resynchronized between each character. Half duplex transmission allows the instrument to be either a transmitter or a receiver of data but not at the same time. Communication speeds of 300, 1200, or 9600 Baud are supported. The Baud rate is the only interface parameter that can be changed by the user.

Hardware handshaking is not supported by the instrument. Handshaking is often used to guarantee that data message strings do not collide and that no data is transmitted before the receiver is ready. In this instrument appropriate software timing substitutes for hardware handshaking. User programs must take full responsibility for flow control and timing as described in Paragraph 6.2.6.

6.2.4 Character Format

A character is the smallest piece of information that can be transmitted by the interface. Each character is 10 bits long and contains data bits, bits for character timing and an error detection bit. The instrument uses 7 bits for data in the ASCII format. One start bit and one stop bit are necessary to synchronize consecutive characters. Parity is a method of error detection. One parity bit configured for odd parity is included in each character.

ASCII letter and number characters are used most often as character data. Punctuation characters are used as delimiters to separate different commands or pieces of data. Two special ASCII characters, carriage return (CR 0DH) and line feed (LF 0AH), are used to indicate the end of a message string.

Table 6-3. Serial Interface Specifications

Connector Type:	9-pin D-style connector plug
Connector Wiring:	DTE
Voltage Levels:	EIA RS-232C Specified
Transmission Distance:	50 feet maximum
Timing Format:	Asynchronous
Transmission Mode:	Half Duplex
Baud Rate:	300, 1200, 9600
Handshake:	Software timing
Character Bits:	1 Start, 7 Data, 1 Parity, 1 Stop
Parity:	Odd
Terminators:	CR(0DH) LF(0AH)
Command Rate:	20 commands per second maximum

6.2.5 Message Strings

A message string is a group of characters assembled to perform an interface function. There are three types of message strings commands, queries and responses. The computer issues command and query strings through user programs, the instrument issues responses. Two or more command strings can be chained together in one communication but they must be separated by a semi-colon (;). Only one query is permitted per communication but it can be chained to the end of a command. The total communication string must not exceed 64 characters in length.

A command string is issued by the computer and instructs the instrument to perform a function or change a parameter setting. The format is:

```
<command mnemonic><space><parameter data><terminators>.
```

Command mnemonics and parameter data necessary for each one is described in Paragraph 6.3. Terminators must be sent with every message string.

Message Strings (Continued)

A query string is issued by the computer and instructs the instrument to send a response. The query format is:

<query mnemonic><?><space><parameter data><terminators>.

Query mnemonics are often the same as commands with the addition of a question mark. Parameter data is often unnecessary when sending queries. Query mnemonics and parameter data if necessary is described in Paragraph 6.3. Terminators must be sent with every message string. The computer should expect a response very soon after a query is sent.

A response string is the instruments response or answer to a query string. The instrument will respond only to the last query it receives. The response can be a reading value, status report or the present value of a parameter. Response data formats are listed along with the associated queries in Paragraph 6.3. The response is sent as soon as possible after the instrument receives the query. Typically it takes 10 ms for the instrument to begin the response. Some responses take longer.

6.2.6 Message Flow Control

It is important to remember that the user program is in charge of the serial communication at all times. The instrument can not initiate communication, determine which device should be transmitting at a given time or guarantee timing between messages. All of this is the responsibility of the user program.

When issuing commands only the user program should:

- Properly format and transmit the command including terminators as one string.
- Guarantee that no other communication is started for 50 ms after the last character is transmitted.
- Not initiate communication more than 20 times per second.

When issuing queries or queries and commands together the user program should:

- Properly format and transmit the query including terminators as one string.
- Prepare to receive a response immediately.
- Receive the entire response from the instrument including the terminators.
- Guarantee that no other communication is started during the response or for 50 ms after it completes.
- Not initiate communication more than 20 times per second.

Failure to follow these simple rules will result in inability to establish communication with the instrument or intermittent failures in communication.

6.2.7 Serial Interface Example Programs

A Visual Basic program is included to illustrate the serial communication functions of the instrument. Refer to Section 6.2.7.1 for instructions on how to setup the program. The Visual Basic code is provided in Table 6-8.
A description of program operation is provided in Section 6.2.7.2. While the hardware and software required to produce and implement these programs not included with the instrument, the concepts illustrated apply to most applications.

6.2.7.1 Visual Basic Serial Interface Program Setup

The serial interface program works with Visual Basic 6.0 (VB6) on an IBM PC (or compatible) with a Pentium-class processor. A Pentium 90 or higher is recommended, running Windows 95 or better, with a serial interface. It uses the COM1 communications port at 9600 Baud. Use the following procedure to develop the Serial Interface Program in Visual Basic.

1. Start VB6.
2. Choose Standard EXE and select Open.
3. Resize form window to desired size.
4. On the Project Menu, click Components to bring up a list of additional controls available in VB6.
5. Scroll through the controls and select Microsoft Comm Control 6.0. Select OK. In the toolbar at the left of the screen, the Comm Control will have appeared as a telephone icon.
6. Select the Comm control and add it to the form.
7. Add controls to form:
   a. Add three Label controls to the form.
   b. Add two TextBox controls to the form.
   c. Add one CommandButton control to the form.
   d. Add one Timer control to the form.
8. On the View Menu, select Properties Window.
9. In the Properties window, use the dropdown list to select between the different controls of the current project.

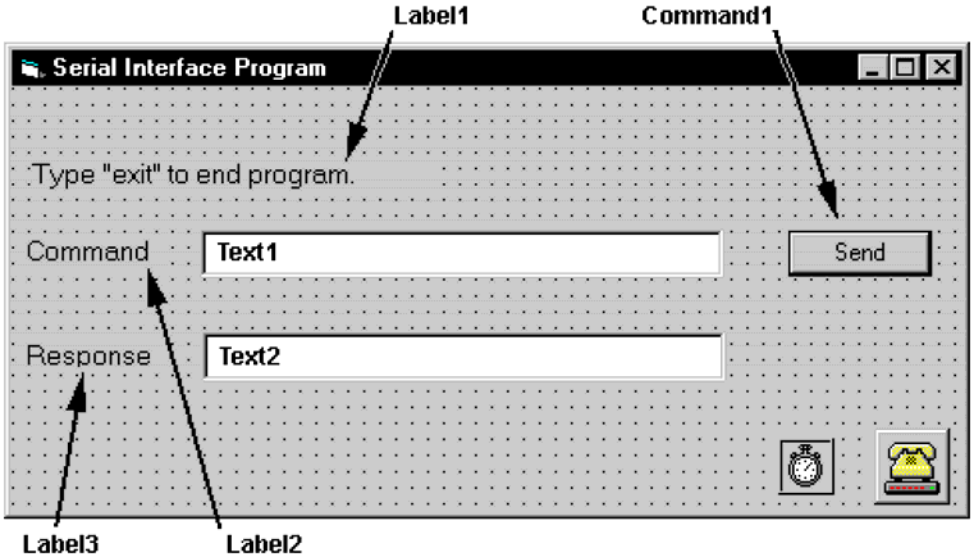

10. Set the properties of the controls as defined in Table 6-4.
11. Save the program.

Table 6-4. Serial Interface Program Control Properties

Current Name	Property	New Value
Label1	Name Caption	lblExitProgram Type "exit" to end program.
Label2	Name Caption	lblCommand Command
Label3	Name Caption	lblResponse Response
Text1	Name Text	txtCommand <blank>
Text2	Name Text	txtResponse <blank>
Command1	Name Caption Default	cmdSend Send True
Form1	Name Caption	frmSerial Serial Interface Program
Timer1	Enabled Interval	False 10

12. Add code (provided in Table 6-5).
    a. In the Code Editor window, under the Object dropdown list, select (General). Add the statement: Public gSend as Boolean
    b. Double Click on cmdSend. Add code segment under Private Sub cmdSend_Click( ) as shown in Table 6-5.
    c. In the Code Editor window, under the Object dropdown list, select Form. Make sure the Procedure dropdown list is set at Load. The Code window should have written the segment of code: Private Sub Form_Load( ). Add the code to this subroutine as shown in Table 6-5.
    d. Double Click on the Timer control. Add code segment under Private Sub Timer1_Timer() as shown in Table 6-5.
    e. Make adjustments to code if different Com port settings are being used.
13. Save the program.
14. Run the program. The program should resemble the following.

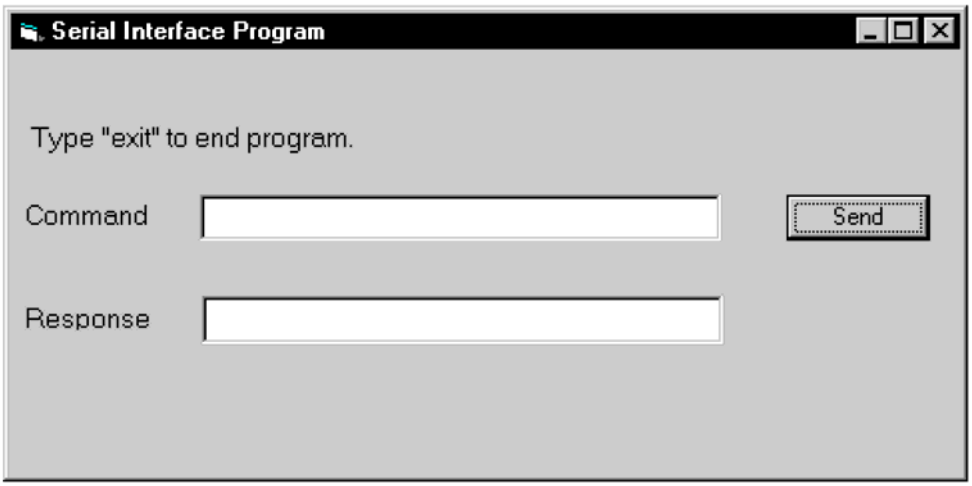

15. Type in a command or query in the Command box as described in Paragraph 6.2.7.3.
16. Press Enter or select the Send button with the mouse to send command.
17. Type Exit and press Enter to quit.

Table 6-5. Visual Basic Serial Interface Program

```
Public gSend As Boolean                                  'Global used for Send button state

Private Sub cmdSend_Click()                              'Routine to handle Send button press
   gSend = True                                          'Set Flag to True
End Sub

Private Sub Form_Load()                                  'Main code section
   Dim strReturn As String                               'Used to return response
   Dim strHold As String                                 'Temporary character space
   Dim Term As String                                    'Terminators
   Dim ZeroCount As Integer                              'Counter used for Timing out
   Dim strCommand As String                              'Data string sent to instrument

   frmSerial.Show                                        'Show main window
   Term = Chr(13) & Chr(10)                              'Terminators are <CR><LF>
   ZeroCount = 0                                         'Initialize counter
   strReturn = ""                                        'Clear return string
   strHold = ""                                          'Clear holding string
   If frmSerial.MSComm1.PortOpen = True Then             'Close serial port to change settings
       frmSerial.MSComm1.PortOpen = False
   End If
   frmSerial.MSComm1.CommPort = 1                        'Example of Comm 1
   frmSerial.MSComm1.Settings = "9600,o,7,1"             'Example of 9600 Baud,Parity,Data,Stop
   frmSerial.MSComm1.InputLen = 1                        'Read one character at a time
   frmSerial.MSComm1.PortOpen = True                     'Open port

 Do
   Do                                                    'Wait loop
   DoEvents                                              'Give up processor to other events
   Loop Until gSend = True                               'Loop until Send button pressed
   gSend = False                                         'Set Flag as false

   strCommand = frmSerial.txtCommand.Text                'Get Command
   strReturn = ""                                        'Clear response display

   strCommand = UCase(strCommand)                        'Set all characters to upper case
   If strCommand = "EXIT" Then                           'Get out on EXIT
       End
   End If

   frmSerial.MSComm1.Output = strCommand & Term          'Send command to instrument
   If InStr(strCommand, "?") <> 0 Then                   'Check to see if query
       While (ZeroCount < 20) And (strHold <> Chr$(10))  'Wait for response
           If frmSerial.MSComm1.InBufferCount = 0 Then   'Add 1 to timeout if no character
               frmSerial.Timer1.Enabled = True
               Do
               DoEvents                                  'Wait for 10 millisecond timer
               Loop Until frmSerial.Timer1.Enabled = False
               ZeroCount = ZeroCount + 1                 'Timeout at 2 seconds
           Else
               ZeroCount = 0                             'Reset timeout for each character
               strHold = frmSerial.MSComm1.Input         'Read in one character
               strReturn = strReturn + strHold           'Add next character to string
           End If
       Wend                                              'Get characters until terminators

       If strReturn <> "" Then                           'Check if string empty
           strReturn = Mid(strReturn, 1, InStr(strReturn, Term) - 1)  'Strip terminators
       Else
           strReturn = "No Response"                     'Send No Response
       End If
       frmSerial.txtResponse.Text = strReturn            'Put response in textbox on main form
       strHold = ""                                      'Reset holding string
       ZeroCount = 0                                     'Reset timeout counter
   End If
 Loop
End Sub

Private Sub Timer1_Timer()                               'Routine to handle Timer interrupt
   frmSerial.Timer1.Enabled = False                      'Turn off timer
End Sub
```

6.2.7.2 Program Operation

Once the example program is running, try the following commands and observe the response of the instrument. Input from the user is shown in **bold** and terminators are added by the program. The word [term] indicates the required terminators included with the response.

`ENTER COMMAND? *IDN?`	Identification query. Instrument will return a string identifying itself.
`RESPONSE: LSCI,MODEL370,123456,02152001[term]`	
`ENTER COMMAND? RDGR? 1`	Ohm reading query. Instrument will return a string with the present resistance reading from channel 1.
`RESPONSE: +273.150E+00[term]`	
`ENTER COMMAND? HTRRNG 0`	Heater range command. Instrument will turn off the heater. No response will be sent.
`ENTER COMMAND? HTRRNG?`	Heater range query. Instrument will return a string with the present heater range setting.
`RESPONSE: 0[term]`	
`ENTER COMMAND? HTRRNG 1;HTRRNG?`	Heater range command followed by a query. Instrument will change to heater Low setting then return a string
`RESPONSE: 1[term]`	with the present setting.

The following are additional notes on using either IEEE-488 Interface program.

- If you enter a correctly spelled query without a "**?**," nothing will be returned. Incorrectly spelled commands and queries are ignored. Commands and queries should have a space separating the command and associated parameters.
- Leading zeros and zeros following a decimal point are not needed in a command string, but are sent in response to a query. A leading "+" is not required but a leading "–" *is* required.

6.2.8 Troubleshooting

New Installation

1. Check instrument Baud rate.
2. Make sure transmit (TD) signal line from the instrument is routed to receive (RD) on the computer and vice versa. (Use a null modem adapter if not).
3. Always send terminators.
4. Send entire message string at one time including terminators. (Many terminal emulation programs do not.)
5. Send only one simple command at a time until communication is established.
6. Be sure to spell commands correctly and use proper syntax.

Old Installation No Longer Working

7. Power instrument off then on again to see if it is a soft failure.
8. Power computer off then on again to see if communication port is locked up.
9. Verify that Baud rate has not been changed on the instrument during a memory reset.
10. Check all cable connections.

Intermittent Lockups

11. Check cable connections and length.
12. Increase delay between all commands to 100 ms to make sure instrument is not being over loaded.

6.3 COMMAND SUMMARY

This paragraph provides a listing of the IEEE-488 and Serial Interface Commands. A summary of all the commands is provided in Table 6-6. All the commands are detailed in Paragraph 6.3.1, which is presented in alphabetical order.

Sample Command Format

FILTER	Filter Parameter Command	
Input:	`FILTER <channel>, <off/on>, <settle time>, <window>[term]`	
Format:	nn,n,nnn,nn	
	<channel>	Specifies which channel to configure: 1–16, 0 = all channels.
	<off/on>	Specifies the filter operating state: 0 = Off , 1 = On.
	<settle time>	Specifies filter settle time: 1–200 seconds.
	<window>	Specifies what percent of full scale reading limits the filtering function. Reading changes greater than this percentage reset the filter: 1–80%.
Example:	**FILTER 5,1,10,2[term]** – Filter channel 5 data through a filter with a settling time of 10 seconds and a 2% of full scale window.	

Sample Query Format

FILTER?	Filter Parameter Query	
Input:	`FILTER? <channel>[term]`	
Format:	nn	
	<channel>	Specifies which channel to query: 1–16.
Returned:	<off/on >, <settle time>, <window>[term]	
Format:	n,nnn,nn	(Refer to command for description)

Key

✱	Begins common interface command.
?	Required to identify queries.
aa…	String of alpha numeric characters.
nn…	String of number characters that may include a decimal point.
±nnn.nnnE±nn	Number represented in scientific notation format.
[term]	Terminator characters.
<…>	Indicated a parameter field, many are command specific.
<state>	Parameter field with only On/Off states.

NOTE: Any number being represented in scientific notation may also be entered as a string of number characters. If the number is only represented as a string of number characters, it cannot be entered in scientific notation. The following example shows two different ways of sending the same command. Refer to the individual command descriptions for further details.

SETP 2.0E+03[term]	Command will set the temperature control setpoint value to 2000.
SETP 2000[term]	Command will set the temperature control setpoint value to 2000.

NOTE: If there is no scanner attached, all <channel> parameter values must be entered as '1'.

Table 6-6. Command Summary

Command	Function	Page
✱CLS	Clear Interface Cmd	20
✱ESE	Event Status Enable Cmd	20
✱ESE?	Event Status Enable Query	20
✱ESR?	Event Status Register Query	20
✱IDN?	Identification Query	20
✱OPC	Operation Complete Cmd	20
✱OPC?	Operation Complete Query	21
✱RST	Reset Instrument Cmd	21
✱SRE	Service Request Enable Cmd	21
✱SRE?	Service Request Enable Query	21
✱STB?	Status Byte Query	21
✱TST?	Self-Test Query	21
✱WAI	Wait-To-Continue Cmd	21
ALARM	Alarm Parameter Cmd	22
ALARM?	Alarm Parameter Query	22
ALARMST?	Alarm Status Query	22
ALMRST	Alarm Reset Cmd	22
ANALOG	Analog Output Parameter Cmd	22
ANALOG?	Analog Output Parameter Query	23
AOUT?	Analog Output Data Query	23
BAUD	RS-232 Baud Rate Cmd	23
BAUD?	RS-232 Baud Rate Query	23
BEEP	Audible Alarm Beeper Cmd	23
BEEP?	Audible Alarm Beeper Query	23
BRIGT	Display Brightness Command	24
BRIGT?	Display Brightness Query	24
CHGALL	Input Change All or One Cmd	24
CHGALL?	Input Change All or One Query	24
CMODE	Temperature Control Mode Cmd	24
CMODE?	Temperature Control Mode Query	24
CMR	Common Mode Reduction Cmd	24
CMR?	Common Mode Reduction Query	24
CPOL	Temp Control Polarity Cmd	25
CPOL?	Temp Control Polarity Query	25
CRVDEL	Curve Delete Cmd	25
CRVHDR	Curve Header Cmd	25
CRVHDR?	Curve Header Query	25
CRVPT	Curve Data Point Cmd	25
CRVPT?	Curve Data Point Query	26
CSET	Temperature Control Setup Parameter Cmd	26
CSET?	Temperature Control Setup Parameter Query	26
DFLT	Factory Defaults Cmd	26
DISPLAY	Display Number Cmd	26
DISPLAY?	Display Number Query	26
DISPLOC	Displayed Location Parameter Cmd	27
DISPLOC?	Displayed Location Parameter Query	27
DOUT	Digital Output Cmd	27
DOUT?	Digital Output Query	27
FILTER	Filter Parameter Cmd	27
FILTER?	Filter Parameter Query	28
FREQ	Excitation Frequency Cmd	28
FREQ?	Excitation Frequency Query	28
GUARD	Guard Drive Cmd	28
GUARD?	Guard Drive Query	28
HTR?	Heater Output Query	28
HTRRNG	Heater Range Cmd	28
HTRRNG?	Heater Range Query	28
HTRST?	Heater Status Query	29
IEEE	IEEE-488 Interface Parameter Cmd	29
IEEE?	IEEE-488 Interface Parameter Query	29
INSET	Input Channel Parameter Cmd	29
INSET?	Input Channel Parameter Query	29
KEYST?	Keypad Status Query	29
LDAT?	Linear Equation Data Query	30
LINEAR	Linear Equation Parameter Cmd	30
LINEAR?	Linear Equation Parameter Query	30
LOCK	Keypad Lock Cmd	30
LOCK?	Keypad Lock Query	30
MDAT?	Min/Max Data Query	30
MNMX	Min/Max Parameter Cmd	31
MNMX?	Min/Max Parameter Query	31
MNMXRST	Min/Max Reset Cmd	31
MODE	IEEE Interface Mode Cmd	31
MODE?	IEEE Interface Mode Query	31
MONITOR	Monitor Output Selection Cmd	31
MONITOR?	Monitor Output Selection Query	31
MOUT	Manual Heater Output Cmd	31
MOUT?	Manual Heater Output Query	32
PID	Closed Loop PID Parameter Cmd	32
PID?	Closed Loop PID Parameter Query	32
RAMP	Setpoint Ramp Parameter Cmd	32
RAMP?	Setpoint Ramp Parameter Query	32
RAMPST?	Setpoint Ramp Status Query	32
RDGK?	Kelvin Reading Query	32
RDGPWR?	Excitation Power Reading Query	33
RDGR?	Resistance Reading Query	33
RDGRNG	Resistance Range Cmd	33
RDGRNG?	Resistance Range Query	34
RDGST?	Reading Status Query	34
RELAY	Relay Parameter Cmd	34
RELAY?	Relay Parameter Query	34
RELAYST?	Relay Status Query	34
SCAN	Scanner Parameter Cmd	35
SCAN?	Scanner Parameter Query	35
SETP	Temperature Control Setpoint Cmd	35
SETP?	Temperature Control Setpoint Query	35
STILL	Still Output Cmd	35
STILL?	Still Output Query	35
ZONE	Zone Table Cmd	36
ZONE?	Zone Table Query	36

6.3.1 Interface Commands (Alphabetical Listing)

∗CLS Clear Interface Command

Input: `*CLS[term]`

Remarks: Clears bits in the Status Byte Register and Standard Event Status Register and terminates all pending operations. Clears the interface, but *not* the instrument. The related instrument command is ***RST**.

∗ESE Event Status Enable Register Command

Input: `*ESE <bit weighting>[term]`

Format: nnn

Remarks: Each bit is assigned a bit weighting and represents the enable/disable mask of the corresponding event flag bit in the Standard Event Status Register. To enable an event flag bit, send the command ***ESE** with the sum of the bit weighting for each desired bit. Refer to Paragraph 6.1.4.2 for a list of event flags.

Example: To enable event flags 0, 4, and 7, send the command ***ESE 145[term]**. 145 is the sum of the bit weighting for each bit.

Bit	Bit Weighting	Event Name
0	1	OPC
4	16	EXE
7	128	PON
	145	

∗ESE? Event Status Enable Register Query

Input: `*ESE?[term]`

Returned: <bit weighting>[term]

Format: nnn Refer to Paragraph 6.1.4.2 for a list of event flags.

∗ESR? Standard Event Status Register Query

Input: `*ESR?[term]`

Returned: <bit weighting>[term]

Format: nnn

Remarks: The integer returned represents the sum of the bit weighting of the event flag bits in the Standard Event Status Register. Refer to Paragraph 6.1.4.1 for a list of event flags.

∗IDN? Identification Query

Input: `*IDN?[term]`

Returned: <manufacturer>,<model>,<serial>,<date>[term]

Format: aaaa,aaaaaaaa,aaaaaa,mmddyyyy

<manufacture>	Manufacturer ID
<model>	Instrument model number
<serial>	Serial number
<date>	Instrument firmware revision date

Example: **LSCI,MODEL370,123456,02032001[term]**

∗OPC Operation Complete Command

Input: `*OPC[term]`

Remarks: Generates an Operation Complete event in the Event Status Register upon completion of all pending selected device operations. Send it as the last command in a command string.

∗OPC?

Operation Complete Query

Input: `*OPC?[term]`

Returned: 1[term]

Remarks: Places a "1" in the instrument output queue upon completion of all pending selected device operations. Send as the last command in a command string. *Not* the same as ***OPC**.

∗RST

Reset Instrument Command

Input: `*RST[term]`

Remarks: Sets instrument parameters to power-up settings. Use the **DFLT** command to set to factory defaults.

∗SRE

Service Request Enable Register Command

Input: `*SRE <bit weighting>[term]`

Format: nnn

Remarks: Each bit has a bit weighting and represents the enable/disable mask of the corresponding status flag bit in the Status Byte Register. To enable a status flag bit, send the command ***SRE** with the sum of the bit weighting for each desired bit. Refer to Paragraph 6.1.4.1 for a list of status flags.

Example: To enable status flags 2, 3, 4, and 6, send the command ***SRE 92[term]**. 92 is the sum of the bit weighting for each bit.

Bit	Bit Weighting	Event Name
2	4	Valid Read
3	8	Alarm
4	16	Error
6	64	SRQ
	92	

∗SRE?

Service Request Enable Register Query

Input: `*SRE?[term]`

Returned: <bit weighting>[term]

Format: nnn Refer to Paragraph 6.1.4.1 for a list of status flags.

∗STB?

Status Byte Query

Input: `*STB?[term]`

Returned: <bit weighting>[term]

Format: nnn

Remarks: Acts like a serial poll, but does not reset the register to all zeros. The integer returned represents the sum of the bit weighting of the status flag bits that are set in the Status Byte Register. Refer to Paragraph 6.1.4.1 for a list of status flags.

∗TST?

Self-Test Query

Input: `*TST?[term]`

Returned: <status>[term]

Format: n

<status> 0 = no errors found, 1 = errors found

Remarks: The Model 370 reports status based on test done at power up.

∗WAI

Wait-to-Continue Command

Input: `*WAI[term]`

Remarks: This command is not supported in the Model 370.

ALARM

Alarm Parameter Command

Input: `ALARM <channel>, <off/on>, <source>, <high value>, <low value>, <deadband>, <latch>[term]`

Format: nn,n,n, ±nnn.nnnE±nn, ±nnn.nnnE±nn, ±nnn.nnnE±nn,n

<channel>	Specifies which channel to configure: 1–16, 0 = all channels.
<off/on>	Specifies alarm checking on or off: 0 = Off, 1 = On.
<data source>	Specifies channel data to check: 1 = Kelvin, 2 = Ohms, 3 = Linear Data.
<high value>	Sets the value the source is checked against to activate the high alarm.
<low value>	Sets the value the source is checked against to activate low alarm.
<deadband>	Sets the value that the source must change outside of an alarm condition to deactivate an unlatched alarm.
<latch>	Specifies a latched alarm (remains active after alarm condition correction): 0 = Non-Latching, 1 = Latching.

Remarks: Configures the alarm parameters for a channel.

Examples: **ALARM 1,0[term] –** Turns off alarm checking for Channel 1. All other parameters are set to zero.
ALARM 5,1,1,270.0,0,0,1[term] – Turns channel 5 alarm checking on with the data source set to Kelvin. Activates high alarm if the reading is over 270, activates low alarm if reading is below 0, and latches the alarm when Kelvin reading falls below 270.

ALARM?

Alarm Parameter Query

Input: `ALARM? <channel>[term]`

Format: nn

<channel>	Specifies which channel to query: 1–16

Returned: <off/on>, <data source>, <high value>, <low value>, <deadband>, <latch>[term]

Format: n,n, ±nnn.nnnE±nn, ±nnn.nnnE±nn, ±nnn.nnnE±nn,n (Refer to command for description)

ALARMST?

Alarm Status Query

Input: `ALARMST? <channel>[term]`

Format: nn

<channel>	Specifies which channel to query: 1–16

Returned: <high state>, <low state>[term]

Format: n,n

<high state>	0 = Off, 1 = On
<low state>	0 = Off, 1 = On

ALMRST

Reset Alarm Command

Input: `ALMRST[term]`

Remarks: Clears both the high and low status of all alarms.

ANALOG

Analog Output Parameter Command

Input: `ANALOG <analog channel>,<polarity>, <mode>, <channel>, <data source>,<high value>, <low value>, <manual value>[term]`

Format: n,n,n,nn,n, ±nnn.nnnE±nn, ±nnn.nnnE±nn,±nnnnnn

<analog channel>	Specifies analog output channel: 1-2.
<polarity>	Specifies analog output polarity: 0 = unipolar, 1 = bipolar.
<mode>	Specifies data the analog output monitors: 0 = off, 1 = channel, 2 = manual, 3 = zone. Analog 2 also has mode 4 = still.
<channel>	Specifies which channel to monitor if <mode> = 1: 1-16.
<source>	Specifies channel data: 1 = Kelvin, 2 = Ohms, 3 = Linear Data.

ANALOG (Continued)

<high value>	If <mode> is 1 , this parameter represents the data at which the analog output reaches +100% output.
<low value>	If <mode> is 1, this parameter represents the data at which the analog output reaches –100% output if bipolar, or 0% output if positive only.
<manual value>	If <mode> is 2, this parameter is the value of the analog output.

Example: **ANALOG 1,0,1,15,1,100.0,0.0[term]** – Configure analog output 1 as unipolar channel mode. Set to monitor channel 15 Kelvin reading with 100.0 K at +100% output (+10.0 V) and 0.0 K at 0% output (0.0 V). Manual value is ignored.

ANALOG?

Analog Output Parameter Query

Input: `ANALOG? <analog channel>[term]`

Format: n

<analog channel>Specifies analog output channel: 1-2.

Returned: <bipolar enable>, <mode>, <channel>, <source>, <high value>, <low value>, <manual value>[term]

Format: n,n,nn,n, ±nnn.nnnE±nn, ±nnn.nnnE±nn,±nnnnnn (Refer to command for definition)

AOUT?

Analog Output Data Query

Input: `AOUT? <analog channel>[term]`

Format: n

<analog channel> Specifies analog output channel: 1-2.

Returned: <analog output>[term]

Format: ±nnnnnn (Refer to command for definition)

Remarks: Returns the percentage of output of the analog control.

BAUD

RS-232 Baud Rate Command

Input: `BAUD <bps>[term]`

Format: n

<bps> Specifies Baud rate: 0 = 300 Baud, 1 = 1200 Baud, 2 = 9600 Baud.

BAUD?

RS-232 Baud Rate Query

Input: `BAUD?[term]`

Returned: <bps>[term]

Format: n (Refer to command for description)

BEEP

Audible Alarm Beeper Command

Input: `BEEP <state>[term]`

Format: n

<state> 0 = Off, Audible alarm beeper remains off.
1 = On, Audible alarm beeper is on when any alarm is active.

Remarks: Enables or disables system beeper sound when an alarm condition is met.

BEEP?

Audible Alarm Beeper Query

Input: `BEEP?[term]`

Returned: <state>[term]

Format: n (Refer to command for description)

BRIGT

Display Brightness Command

Input: `BRIGT <bright>[term]`

Format: n

<bright> Specifies display brightness: 0 = 25%, 1 = 50%, 2 = 75%, 3 = 100%. Default = 2.

BRIGT?

Display Brightness Query

Input: `BRIGT?[term]`

Returned: <bright>[term]

Format: n (Refer to command for description)

CHGALL

Input Change All or One Command

Input: `CHGALL <state>[term]`

Format: n

<state> Specifies if Range and Excitation keys affect all channels together or individually: 0 = One, 1 = All.

Remarks: Only active when the Model 3716 Scanner is installed.

CHGALL?

Input Change All or One Query

Input: `CHGALL?[term]`

Returned: <state>[term]

Format: n (Refer to command for description)

CMODE

Temperature Control Mode Command

Input: `CMODE <mode>[term]`

Format: n

<mode> Specifies control mode: 1 = Closed Loop PID, 2 = Zone Tuning, 3 = Open Loop, 4 = Off.

Example: **CMODE 3[term]** – Set control mode to Open Loop control.

CMODE?

Temperature Control Mode Query

Input: `CMODE?[term]`

Returned: <mode>[term]

Format: n (Refer to command for description)

CMR

Common Mode Reduction Command

Input: `CMR <state>[term]`

Format: n

<state> 0 = Off, 1 = On.

Remarks: Enables or disables common mode reduction.

CMR?

Common Mode Reduction Query

Input: `CMR?[term]`

Returned: <state>[term]

Format: n (Refer to command for description)

CPOL

Temperature Control Polarity Command

Input: `CPOL <polarity>[term]`

Format: n

<polarity> Specifies control (heater output) polarity: 0 = Unipolar, 1 = Bipolar.

Remarks: When the temperature control output (heater output) is used to control a resistive heater, this parameter should always be set to unipolar. The bipolar setting should only be used in rare circumstances when the output is used to drive something other than a resistive heater.

CPOL?

Temperature Control Polarity Query

Input: `CPOL?[term]`

Returned: <polarity>[term]

Format: n (Refer to command for description)

CRVDEL

Curve Delete Command

Input: `CRVDEL <curve>[term]`

Format: nn

<curve> Specifies which curve to delete: 1 – 20.

Example: **CRVDEL 20[term]** – Deletes Curve 20.

CRVHDR

Curve Header Command

Input: `CRVHDR <curve>, <name>, <SN>, <format>, <setpoint limit>, <coefficient>[term]`

Format: nn,aaaaaaaaaaaaaaa,aaaaaaaaaa,n,±nnn.nnn,n

<curve> Specifies which curve to configure: 1 – 20.

<name> Specifies curve name. Limited to 15 characters.

<SN> Specifies the curve serial number. Limited to 10 characters.

<format> Specifies the curve data format: 3 = Ω/K, 4 = log Ω /K.

<setpoint limit>Specifies the curve temperature limit in Kelvin.

<coefficient> Specifies the curves temperature coefficient: 1 = negative, 2 = positive.

Remarks: Configures the user curve header.

Example: **CRVHDR 2,DT-470,00011134,3,3.250,1[term]** – Configures User Curve 2 with a name of DT-470, serial no. 00011134, data format of Ohms vs. Kelvin, setpoint limit of 3.25 K, and negative coefficient.

CRVHDR?

Curve Header Query

Input: `CRVHDR? <curve>[term]`

Format: nn

<curve> Specifies which curve to query: 1 – 20.

Returned: <name>, <SN>, <format>, <setpoint limit>, <coefficient>[term]

Format: aaaaaaaaaaaaaaa,aaaaaaaaaa,n,±nnn.nnn,n (Refer to command for description)

CRVPT

Curve Data Point Command

Input: `CRVPT <curve>, <index>, <units value>, <temp value>[term]`

Format: nn,nnn, ±nnn.nnnE±nn, ±nnn.nnnE±nn

<curve> Specifies which curve to configure: 1–20.

<index> Specifies the points index in the curve: 1–200.

<units value> Specifies resistance value for this point to 6 digits, in ohms or log ohms depending on curve data format.

<temp value> Specifies the corresponding temperature in Kelvin for this point to 6 digits.

Remarks: Configures a user curve data point.

Example: **CRVPT 1,2,0.10191,0.470[term] –** Sets User Curve 1 second data point to 0.10191 resistance units and 470.000 mK.

CRVPT?

Curve Data Point Query

Input: `CRVPT? <curve>, <index>[term]`

Format: nn,nnn

<curve> Specifies which curve to query. 1 – 20.

<index> Specifies the points index in the curve. 1 – 200.

Returned: <units value>, <temp value>[term]

Format: ±nnn.nnnE±nn, ±nnn.nnnE±nn (Refer to command for description)

Remarks: Returns a standard or user curve data point.

CSET

Temperature Control Setup Parameter Command

Input: `CSET <channel>,<filter>,<units>,<delay>, <current/power>, <htr limit>, <htr resistance>[term]`

Format: nn,n,n,nnn,n,n, ±nnn.nnn

<channel> Specifies which channel to control from: 1–16.

<filter> Specifies controlling on unfiltered or filtered readings: 0 = unfiltered, 1 = filtered.

<units> Specifies setpoint units: 1 = Kelvin, 2 = Ohms.

<delay> Delay in seconds for setpoint change during Autoscanning: 1–255

<current/power> Specifies heater output display in current or power: 1 = current, 2 = power.

<htr limit> Maximum heater range: 1–8. (Refer to **HTRRNG** for detailed range listing.)

<htr resistance> Heater load in ohms: 1–100,000.

Example: **CSET 16,0,1,30,1,8,100[term]** – The Model 370 controls from channel 16 unfiltered readings. The setpoint is in Kelvin with a 30 second setpoint change pause time. The heater output is displayed in current. The heater maximum range limit is set to 100 mA and the heater load is set to 100 Ω.

CSET?

Temperature Control Setup Parameter Query

Input: `CSET?[term]`

Returned: <channel>, <filter>,<units>, <delay>, <current/power>,<htr limit>, <htr resistance>[term]

Format: nn,n,n,nnn,n,n, ±nnn.nnn (Refer to command for description)

DFLT

Factory Defaults Command

Input: `DFLT 99[term]`

Remarks: Sets all configuration values to factory defaults and resets the instrument. The "99" is included to prevent accidentally setting the unit to defaults.

DISPLAY

Display Number Command

Input: `DISPLAY <locations>[term]`

Format: n

<locations> Specifies number of locations to display: 1–8.

Example: **DISPLAY 7[term]** – Display 7 locations.

DISPLAY?

Display Number Query

Input: `DISPLAY?[term]`

Returned: <locations>[term]

Format: n (Refer to command for description)

DISPLOC

Displayed Location Parameter Command

Input: `DISPLOC <location>, <channel>, <data source>,<resolution>[term]`

Format: n,nn,n,n

<location>	Specifies location to configure: 1–8.
<channel>	Specifies channel to display in the field: 1–16, 0 = Scan channel
<data source>	Specifies data for display: 1 = Kelvin, 2 = Ohms, 3 = linear data, 4 = minimum data, and 5 = maximum data.
<resolution>	Display resolution in number of digits: 4–6.

Example: **DISPLOC 2,11,1,6[term]** – Setup display location 2 to display the channel 11 Kelvin readings with 6 digits of resolution.

DISPLOC?

Displayed Location Query

Input: `DISPLOC? <location>[term]`

Format: n

<location>	Specifies location to query: 1–8.

Returned: <channel>, <data source>,<resolution>[term]

Format: nn,n,n (Refer to command for description)

DOUT

Digital Output Command

Input: `DOUT <bit weighting>[term]`

Format: nn

<bit weighting> Specifies the manual digital output settings: 0–31.

Bit	Bit Weighting	Name
0	1	D1
1	2	D2
2	4	D3
3	8	D4
4	16	D5

Remarks: This command is only active if no Model 3716 Scanner is installed.

Example: **DOUT 21[term] –** Manually sets digital output lines D1, D3, and D5 to logic high, and D2 and D4 to logic low.

DOUT?

Digital Output Query

Input: `DOUT?[term]`

Returned: <bit weighting>[term]

Format: nn (Refer to command for description)

FILTER

Filter Parameter Command

Input: `FILTER <channel>, <off/on>, <settle time>, <window>[term]`

Format: nn,n,nnn,nn

<channel>	Specifies which channel to configure: 1–16, 0 = all channels.
<off/on>	Specifies the filter operating state: 0 = Off , 1 = On.
<settle time>	Specifies filter settle time: 1–200 seconds.
<window>	Specifies what percent of full scale reading limits the filtering function. Reading changes greater than this percentage reset the filter: 1–80%.

Example: **FILTER 5,1,10,2[term]** – Filter channel 5 data through a filter with a settling time of 10 seconds and a 2% of full scale window.

FILTER?

Filter Parameter Query

Input: `FILTER? <channel>[term]`

Format: nn

<channel> Specifies which channel to query: 1–16.

Returned: <off/on >, <settle time>, <window>[term]

Format: n,nnn,nn (Refer to command for description)

FREQ

Excitation Frequency Command

Input: `FREQ <frequency>[term]`

Format: n

<frequency> Specifies the instruments excitation frequency. 1 = 9.8 Hz, 2 = 13.7 Hz, 3 = 16.2 Hz.

Remarks: Changes the excitation frequency of the instrument. Takes several seconds to complete.

FREQ?

Excitation Frequency Query

Input: `FREQ?[term]`

Returned: <frequency>[term]

Format: n (Refer to command for description)

GUARD

Guard Drive Command

Input: `GUARD <state>[term]`

Format: n

<state> 0 = Off, 1 = On.

Remarks: Enables or disables the guard drive.

GUARD?

Guard Drive Query

Input: `GUARD?[term]`

Returned: <state>[term]

Format: n (Refer to command for description)

HTR?

Heater Output Query

Input: `HTR?[term]`

Returned: <heater value>[term]

Format: ±nnn.nnnE±nn

<heater value> Heater output in percent (%) of current or in actual power depending on the heater output selection.

HTRRNG

Heater Range Command

Input: `HTRRNG <range>[term]`

Format: n

<range> Specifies heater current range: 0 = Off, 1 = 31.6 µA, 2 = 100 µA, 3 = 316 µA, 4 = 1.00 mA, 5 = 3.16 mA, 6 = 10.0 mA, 7 = 31.6 mA, 8 = 100 mA

HTRRNG?

Heater Range Query

Input: `HTRRNG?[term]`

Returned: <range>[term]

Format: n (Refer to command for description)

HTRST?

Heater Status Query

Input: `HTRST?[term]`

Returned: <error code>[term]

Format: n

<error code> Heater error code: 0 = no error, 1 = heater open error.

IEEE

IEEE-488 Interface Parameter Command

Input: `IEEE <terminator>, <EOI enable>, <address>[term]`

Format: n,n,nn

<terminator> Specifies the terminator: 0 = <CR><LF>,1 = <LF><CR>, 2 = <LF>, 3 = no terminator (must have EOI enabled).

<EOI enable> Sets EOI mode: 0 = enabled, 1 = disabled.

<address> Specifies the IEEE address: 1–30. (Address 0 and 31 are reserved.)

Example: **IEEE 0,0,4[term]** – After receipt of the current terminator, the instrument uses <CR><LF> as the new terminator, uses EOI mode, and responds to address 4.

IEEE?

IEEE-488 Interface Parameter Query

Input: `IEEE?[term]`

Returned: <terminator>, <EOI enable>, <address>[term]

Format: n,n,nn (Refer to command for description)

INSET

Input Channel Parameter Command

Input: `INSET <channel>, <off/on>, <dwell>, <pause>, <curve number>,<tempco>[term]`

Format: nn,n,nnn,nnn,n

<channel> Specifies which channel to configure: 1–16, 0 = all channels.

<off/on> Specifies whether the channel is on or off: 0 = Off, 1 = On.

<dwell> Specifies a value for the autoscanning dwell time: 1–200 seconds.

<pause> Specifies a value for the change pause time: 3–200 seconds.

<curve number> Specifies which curve the channel uses: 0 = no curve, 1–20 = user curves.

<tempco> Sets the temperature coefficient that will be used for temperature control if no curve is selected: 1= negative, 2 = positive.

Example: **INSET 5,1,10,3,0,2[term] –** Enables channel 5 with 10 second autoscan dwell, 3 second pause time, and no curve with a positive temperature coefficient.

INSET?

Input Channel Parameter Query

Input: `INSET? <channel>[term]`

Format: nn

<channel> Specifies which channel to query: 1–16.

Returned: <off/on>, <dwell>, <pause>, <curve number>,<tempco>[term]

Format: n,nnn,nnn,n (Refer to command for description)

KEYST?

Keypad Status Query

Input: `KEYST?[term]`

Returned: <keypad status>[term]

Format: n

<keypad status> 5–40 = key pressed, 0 = no key pressed.

Remarks: Returns keypad status since the last KEYST?. KEYST? returns 1 after initial power-up. Is set to 0 after query. If a number other than 0 is returned, that number represents a mapping of the actual key pressed. Mapping is determined by counting the keys until the key being pressed is located, beginning with row 1 of the keypad. If the key is not found in the row being mapped, counting will continue in the next row of the keypad.

LDAT? Linear Equation Data Query

Input: `LDAT? <channel>[term]`

Format: nn

<channel> Specifies which channel to query: 1–16.

Returned: <linear value>[term]

Format: ±nnn.nnnE±nn

Remarks: Also see the RDGST? command.

LINEAR Linear Equation Parameter Command

Input: `LINEAR <channel>, <equation>, <M value>, <X source>, <B source>, <B value>[term]`

Format: nn,n,±nnnnnn,n,n, ±nnn.nnnE±nn

<channel> Specifies channel to configure: 1–16, 0 = all channels.

<equation> Specifies linear equation to use: 1 = (y = mx + b), 2 = (y = m(x + b)).

<M value> Specifies a value for M in the equation.

<X source > Specifies data source for X: 1 = Kelvin, 2 = Ohms.

<B source > Specifies source for B in the equation. To use a setpoint, set its units to the same type specified in <X source>: 1 = a value, 2 = +SP, 3 = –SP.

<B value> Specifies a value for B in the equation if <B source> is 1.

Example: **LINEAR 5,1,1.0,1,3[term] –** The linear data for Channel 5 is calculated using the equation y=mx+b. The value of m is 1.0, x is set to Kelvin, and b is set to –SP.

LINEAR? Linear Equation Parameter Query

Input: `LINEAR? <channel>[term]`

Format: nn

<channel> Specifies which channel to query: 1–16.

Returned: <equation>, <M value>, <X source>, <B source>, <B value>[term]

Format: n,±nnnnnn,n,n, ±nnn.nnnE±nn (Refer to command for description)

Remarks: Returns channel linear equation parameter values.

LOCK Keypad Lock Command

Input: `LOCK <state>, <code>[term]`

Format: n,nnn

<state> 0 = Unlocked, 1 = Locked

<code> Specifies lock-out code: 000–999.

Remarks: Locks out all front panel entries except pressing the **Alarm** key to silence alarms, or selecting to turn the heater off.

Example: **LOCK 1,123[term] –** Enables keypad lock and sets the code to 123.

LOCK? Keypad Lock Query

Input: `LOCK?[term]`

Returned: <state>, <code>[term]

Format: n,nnn (Refer to command for description)

MDAT? Minimum/Maximum Data Query

Input: `MDAT? <channel>[term]`

Format: nn

<channel> Specifies which channel to query: 1–16.

Returned: <min value>,<max value>[term]

Format: ±nnn.nnnE±nn, ±nnn.nnnE±nn

Remarks: Returns the minimum and maximum channel data. Also see the RDGST? command.

MNMX

Minimum and Maximum Parameter Command

Input: `MNMX <channel>, <source>[term]`

Format: nn,n

<channel> Specifies channel to configure: 1 – 16, 0 = all channels.

<source> Specifies channel data to process through max/min: 1 = Kelvin, 2 = Ohms, 3 = Linear Data.

Example: **MNMX 8,2[term]** – Channel 8 min/max function is on and processes data from the ohm reading.

MNMX?

Minimum and Maximum Parameter Query

Input: `MNMX? <channel>[term]`

Format: nn

<channel> Specifies which channel to query: 1–16.

Returned: <source>[term]

Format: n (Refer to command for description)

MNMXRST

Minimum and Maximum Reset Command

Input: `MNMXRST[term]`

Remarks: Resets the minimum and maximum data for all channels. Active scan channel will reset immediately, while all other channels will reset with the first valid reading they receive.

MODE

IEEE Interface Mode Command

Input: `MODE <mode>[term]`

Format: n

<mode> 0 = local, 1 = remote, 2 = remote with local lockout.

Example: **MODE 2[term] –** Places the Model 370 into remote mode with local lockout.

MODE?

IEEE Interface Mode Query

Input: `MODE?[term]`

Returned: <mode>[term]

Format: n (Refer to command for description)

MONITOR

Monitor Output Selection Command

Input: `MONITOR <source>[term]`

Format: n

<source> 0 = Off, 1 = CS NEG, 2 = CS POS, 3 = VAD, 4 = VCM NEG, 5 = VCM POS, 6 = VDIF, 7 = VMIX.

Remarks: Selects the source of the Monitor Output.

MONITOR?

Monitor Output Selection Query

Input: `MONITOR?[term]`

Returned: <source>[term]

Format: n (Refer to command for description)

MOUT

Manual Heater Output Command

Input: `MOUT <value>[term]`

Format: ±nnn.nnnE±nn

<value> Specifies value for manual output in percent current or power. Depending on the heater output selection.

Example: **MOUT 22.45[term]** – Control Loop manual output is 22.45% of full scale current.

MOUT 1.0E-03[term] – Control Loop manual output is 1 mW.

MOUT?

Manual Heater Output Query

Input: `MOUT?[term]`

Returned: <value>[term]

Format: ±nnn.nnnE±nn (Refer to command for description)

PID

Closed Loop PID Parameter Command

Input: `PID <P value>, <I value>, <D value>[term]`

Format: ±nnnnnn,±nnnnnn,±nnnnnn

<P value> The value for control loop Proportional (gain): 0.001 to 1000.

<I value> The value for control loop Integral (reset): 0 to 10000.

<D value> The value for control loop Derivative (rate): 0 to 2500.

Remarks: Setting resolution is less than 6 digits indicated.

Example: **PID 10,100,20[term]** – P = 10, I = 100 seconds, and D = 20 seconds.

PID?

Closed Loop PID Parameter Query

Input: `PID?[term]`

Returned: <P value>, <I value>, <D value>[term]

Format: ±nnnnnn,±nnnnnn,±nnnnnn (Refer to command for description)

RAMP

Setpoint Ramp Parameter Command

Input: `RAMP <off/on>, <rate value>[term]`

Format: n,±nnnnn

<off/on> Specifies whether ramping is on or off: 0 = Off, 1 = On.

<rate value> Specifies setpoint ramp rate in Kelvin per minute from 0.001 to 10. The rate is always positive, but will respond to ramps up or down.

Example: **RAMP 1,1.5[term]** – When the temperature control setpoint is changed it ramps to the target at 1.5 K/minute.

RAMP?

Setpoint Ramp Parameter Query

Input: `RAMP?[term]`

Returned: <off/on>, <rate value>[term]

Format: n,±nnnnn (Refer to command for description)

RAMPST?

Setpoint Ramp Status Query

Input: `RAMPST?[term]`

Returned: <ramp status>[term]

Format: n

<ramp status> 0 = Not ramping, 1 = Setpoint is ramping.

RDGK?

Kelvin Reading Query

Input: `RDGK? <channel>[term]`

Format: nn

<channel> Specifies which channel to query: 1–16.

Returned: <kelvin value>[term]

Format: ±nnn.nnnE±nn

Remarks: Also see RDGST? If no curve is present for the channel, the returned reading will be zero.

RDGPWR? Excitation Power Reading Query

Input: `RDGPRR? <channel>[term]`

Format: nn

<channel> Specifies which channel to query: 1–16.

Returned: <excitation power>[term]

Format: ±nnn.nnnE±nn

Remarks: Also see RDGST? Returns the most recent power calculation for the specified channel.

RDGR? Resistance Reading Query

Input: `RDGR? <channel>[term]`

Format: nn

<channel> Specifies which channel to query: 1–16.

Returned: <ohm value>[term]

Format: ±nnn.nnnE±nn

Remarks: Also see the RDGST? command.

RDGRNG Resistance Range Command

Input: `RDGRNG <channel>,<mode>, <excitation>, <range>,<autorange>,<cs off>[term]`

Format: nn,n,nn,nn

<channel> Specifies which channel to configure: 1–16, 0 = all channels.
<mode> 0 = Voltage Excitation Mode, 1 = Current Excitation Mode.
<excitation> Excitation range number: 1–22 for Current Excitation, 1–12 for Voltage Excitation.
<range> Resistance range number: 1–22.
<autorange> 0 = autorange off, 1 = autorange on.
<cs off> 0 = excitation on, 1 = excitation off.

Example: **RDGRNG 8,1,9,14,0,0[term]** – Channel 8 in current excitation mode with a excitation of 9 (10.0 nA). The resistance range is set to 14 which is the 6.32 kΩ range. Turn autorange off and excitation on.

Voltage Range		Current Range		Resistance Range	
1	2.00 µV	1	1.00 pA	1	2.00 mΩ
2	6.32 µV	2	3.16 pA	2	6.32 mΩ
3	20.0 µV	3	10.0 pA	3	20.0 mΩ
4	63.2 µV	4	31.6 pA	4	63.2 mΩ
5	200 µV	5	100 pA	5	200 mΩ
6	632 µV	6	316 pA	6	632 mΩ
7	2.00 mV	7	1.00 nA	7	2.00 Ω
8	6.32 mV	8	3.16 nA	8	6.32 Ω
*9	20.0 mV	9	10.0 nA	9	20.0 Ω
*10	63.2 mV	10	31.6 nA	10	63.2 Ω
*11	200 mV	11	100 nA	11	200 Ω
*12	632 mV	12	316 nA	12	632 Ω
		13	1.00 µA	13	2.00 kΩ
		14	3.16 µA	14	6.32 kΩ
		15	10.0 µA	15	20.0 kΩ
		16	31.6 µA	16	63.2 kΩ
		17	100 µA	17	200 kΩ
		18	316 µA	18	632 kΩ
		19	1.00 mA	19	2.00 MΩ
		20	3.16 mA	20	6.32 MΩ
		21	10.0 mA	21	20.0 MΩ
		22	31.6 mA	22	63.2 MΩ

**Ranges not available with the Model 3708 Scanner*

RDGRNG? Resistance Range Query

Input: `RDGRNG? <channel>[term]`

Format: nn

<channel> Specifies which channel to query: 1–16.

Returned: <mode>, <excitation>, <range>,<autorange>,<cs off>[term]

Format: n,nn,nn,n,n (Refer to command for description)

RDGST? Reading Status Query

Input: `RDGST? <channel>[term]`

Format: nn

<channel> Specifies which channel to query: 1–16.

Returned: <status bit weighting>[term]

Format: nnn

Remarks: The integer returned represents the sum of the bit weighting of the status flag bits. A "000" response indicates a valid reading is present. If the channel being queried is not the actively scanning channel, the status will represent the last state prior to the channel change.

Bit	Bit Weighting	Status Indicator
0	1	CS OVL
1	2	VCM OVL
2	4	VMIX OVL
3	8	VDIF OVL
4	16	R. OVER
5	32	R. UNDER
6	64	T. OVER
7	128	T. UNDER

RELAY Relay Parameter Command

Input: `RELAY <relay number>, <mode>, <channel alarm>, <alarm type>[term]`

Format: n,n,nn,n

<relay number> Specifies which relay to configure: 1 = low relay, 2 = high relay.

<mode> Specifies relay mode: 0 = Off, 1 = On, 2 = Alarms, 3 = Zone.

<channel alarm> Specifies which channel alarm activates the relay when the relay is in alarm mode: 1–16, 0 = scan channel.

<alarm type> Specifies the channel alarm type that activates the relay when the relay is in alarm mode: 0 = Low Alarm, 1 = High Alarm, 2 = Both Alarms.

Example: **RELAY 1,2,2,0[term]** – Relay 1 is setup in Alarms mode and activates when Channel 2 low alarm activates.

RELAY? Relay Parameter Query

Input: `RELAY? <relay number>[term]`

Format: n

<relay number> Specifies which relay to query: 1–2.

Returned: <mode>, <channel alarm>, <alarm type>[term]

Format: n,nn,n (Refer to command for description)

RELAYST? Relay Status Query

Input: `RELAYST? <relay number>[term]`

Format: n

<relay number> Specifies which relay to query: 1 = Low relay, 2 = High relay.

Returned: <status>[term]

Format: n 0 = Off, 1 = On.

SCAN

Scanner Parameter Command

Input: `SCAN <channel>,<autoscan>[term]`

Format: nn,n

<channel> Specifies which channel to switch the scanner to: 1–16 (or 1-8 if a Model 3708 scanner is installed).

<autoscan> 0 = autoscan feature off, 1 = autoscan feature on.

Example: **SCAN 5,1[term] –** Change the scanner to channel 5 and begin autoscanning.

Remarks: This command is only active if an optional scanner is installed.

SCAN?

Scanner Parameter Query

Input: `SCAN?[term]`

Returned: <channel>,<autoscan>[term]

Format: nn,n (Refer to command for description.)

SETP

Temperature Control Setpoint Command

Input: `SETP <value>[term]`

Format: ±nnn.nnnE±nn

<value> The value for the setpoint (in whatever units the setpoint is using).

Example: **SETP 1.5[term] –** Setpoint is changed to 1.5 Kelvin if control units are Kelvin.

SETP 2.0E+03[term] – Setpoint is changed to 2.0 kΩ if control units are ohms.

SETP?

Temperature Control Setpoint Query

Input: `SETP?[term]`

Returned: <value>[term]

Format: ±nnn.nnnE±nn

STILL

Still Output Command

Input: `STILL <value>[term]`

Format: ±nnnnnn

<value> Specifies value for the Still output in percent.

Example: **STILL 22.45[term]** – Still output is 22.45 % of full scale.

Remarks: Command only valid if Still is properly configured in Analog Output 2.

STILL?

Still Output Query

Input: `STILL?[term]`

Returned: <value>[term]

Format: ±nnnnnn (Refer to command for description.)

ZONE

Zone Table Parameter Command

Input: `ZONE <zone>, <setpoint limit>, <P value>, <I value>, <D value>, <mout value>, <htr range>,<relay low>, <relay high>, <analog 1>, <analog 2>[term]`

Format: nn, ±nnn.nnnE±nn,±nnnnnn,±nnnnnn,±nnnnnn,±nnnnnn,n,n,n,±nnnnnn,±nnnnnn

<zone>	Specifies which zone in the table to configure: 1–10.
<top value>	Specifies the setpoint limit of this zone.
<P value>	Specifies the P for this zone: 0.001–1000.
<I value>	Specifies the I for this zone: 0–10000.
<D value>	Specifies the D for this zone: 0–10000.
<mout value>	Specifies the manual output for this zone: 0–100%.
<htr range>	Specifies the heater range for this zone: 0–8. (Refer to **HTRRNG** for listing.)
<relay low>	Specifies the Low relay state: 0 = off, 1 = on.
<relay high>	Specifies the High relay state: 0 = off, 1 = on.
<analog 1>	Specifies the Analog 1 output for this zone: –100% to 100%.
<analog 2>	Specifies the Analog 2 output for this zone: –100% to 100%.

Remarks: Configures the control loop limit band parameters used in conjunction with the Status Byte Register. Refer to Paragraph 6.1.4.1.

Example: **ZONE 1,0.25,10,20,0,0,2,0,0,10,50[term]** – Zone 1 is valid to 0.250 K with P = 10, I = 20, D = 0, a manual out of 0%, and a heater range of 2. Both relays will be off and Analog output 1 will be at 10% and Analog output 2 will be at 50%.

ZONE?

Control Loop Zone Table Parameter Query

Input: `ZONE? <zone>[term]`

Format: n

<zone>	Specifies which zone in the table to query: 1–10.

Returned: <setpoint limit>, <P value>, <I value>, <D value>, <mout value>, <htr range>, <relay low>, <relay high>, <analog 1>, <analog 2>[term]

Format: ±nnn.nnnE±nn,±nnnnnn,±nnnnnn,±nnnnnn,±nnnnnn,n, n,n,±nnnnnn, ±nnnnnn
(Refer to command for description.)

CHAPTER 7

OPTIONS AND ACCESSORIES

7.0 GENERAL

This chapter provides information on the Model 370 AC Resistance Bridge models, options, and accessories.

7.1 MODELS

The list of Model 370 and optional scanner model numbers is provided as follows.

Model	Description Of Models
370S	**Standard AC Resistance Bridge**. Includes a Lake Shore Model 370 AC Resistance Bridge with a Lake Shore Model 3716 16-Channel Scanner. Power is configured as shown below.
370L	**Standard AC Resistance Bridge:** Includes a Lake Shore Model 370 AC Resistance Bridge with a Lake Shore Model 3716/L 16 Channel Scanner. Power is configured as shown below.
370U	**Standard AC Resistance Bridge.** Includes a Lake Shore Model 370 AC Resistance Bridge with a Lake Shore Model 3708 8 Channel Scanner. Power is configured as shown below.
370N	**AC Resistance Bridge Only**. Includes a Lake Shore Model 370 AC Resistance Bridge only with no scanner. Power is configured as shown below.
3716	**16-channel scanner for Model 370**
3716L	**Low resistance 16-channel scanner for Model 370**
3708	**Ultra-low resistance 8-channel preamp/scanner for Model 370**
3708-ARW	**Ultra-low resistance 8-channel preamp/scanner for Model 370.** Includes 370 upgrade for instruments with main version 9/27/2005 and input version 1.3 or earlier firmware.

Power Configurations. The instrument is configured at the factory for customer-selected power as follows.

VAC-100	Instrument configured for 100 VAC with U.S. power cord.
VAC-120	Instrument configured for 120 VAC with U.S. power cord.
VAC-220	Instrument configured for 220 VAC with universal European line cord.
VAC-240	Instrument configured for 240 VAC with universal European line cord.
VAC-120-ALL	Instrument configured for 120 VAC with U.S. power cord and universal European line cord and fuses for 220/240 setting.

7.2 OPTIONS

The list of Model 370 options is provided as follows.

Model	Description Of Options
8000	**CalCurve™ on Floppy Disk or E-Mail.** The Model 8000 CalCurve is offered on floppy disk or via e-mail free of charge at time of order to any customer who orders a calibrated sensor. The Model 8000 consists of calibration breakpoint interpolation data stored in ASCII format. Also included is a PC executable program to load the data into a Lake Shore Instrument via IEEE-488 or RS-232 Interface. Once loaded, the instrument uses the data to calculate and display temperature. The following information is included: raw data, coefficients, interpolation table, instrument breakpoints, a curve loading program, and Readme.txt describing the file formats.
8001-370	**CalCurve™, Factory Installed.** Provides users with a convenient method of storing sensor calibrations within Lake Shore Instruments. Calibration data (breakpoint interpolation table) for a specific sensor is stored into a nonvolatile memory.
8002-05-370	**CalCurve™, Field Installation.** For users who already own a Model 370. When ordering, please specify your instrument serial number and calibrated sensor model and serial number. A new NOVRAM will be sent for Customer installation.

7.3 ACCESSORIES

Accessories are devices that perform a secondary duty as an aid or refinement to the primary unit. Refer to the Lake Shore Temperature Measurement and Control Catalog for details. A list of accessories for the Model 370 follows:

Model	Description Of Accessories
G-106-233 *	**Sensor Input Mating Connector**. 6-pin DIN plugs for Input connections; 2 included.
G-106-253 †	**DB-25 Plug**. Quantity of 4 included.
G-106-264 †	**DB-25 Hood**. Quantity of 4 included.
106-737 *	**Terminal Block Mating Connector**. 6-pin terminal block for the Alarm Relays output.
107-379 †	**Scanner Box Mounting Bracket**. Used to mount the Model 3716 Scanner.
112-374 †	**Cable Assembly**. Connects Model 370 to optional scanner, 3 meters (10 feet) long. See Figure 7-1.
4005	**IEEE-488 Cable Kit.** One meter (3 feet) long IEEE-488 (GPIB) computer interface cable assembly. Includes extender required to use both IEEE cable and relay terminal block simultaneously.
ES-2-20	**Stycast® Epoxy 2850-FT, Catalyst 9 (20 packets, 2 grams each)**. Stycast is a common, highly versatile, nonconductive epoxy resin system for cryogenic use. The primary use for Stycast is for vacuum feedthroughs or permanent thermal anchors. Stycast is an alternative to Apiezon N Grease when permanent sensor mountings are desired.
ID-10-XX	**Indium Solder Disks (Quantity 10).** Indium is a semi-precious non-ferrous metal, softer than lead, and extremely malleable and ductile. It stays soft and workable down to cryogenic temperatures. Indium can be used to create solder "bumps" for microelectronic chip attachments and also as gaskets for pressure and vacuum sealing purposes. **ID-10-31** Indium Disks are 0.312 diameter × 0.005 inches. **ID-10-56** Indium Disks are 0.562 diameter × 0.005 inches.
IF-5	**Indium Foil Sheets (Quantity 5).** When used as a washer between temperature sensors and refrigerator cold stages, indium foil increases the thermal contact area and prevents the sensor from detaching due to vibration. It also may be used as a sealing gasket for covers, flanges, and windows in cryogenic applications. Each sheet is 0.005 × 2 × 2 inches.

GAH-25	**Apiezon® "H" Grease, 25 gram Tube**. It is designed for general purposes where operating temperatures necessitate the use of a relatively high melting point grease. Melting point is ≈523 K (250 °C). Can be removed using Xylene with an Isopropyl alcohol rinse.
GAN-25	**Apiezon® "N" Grease, 25 gram Tube**. General purpose grease well-suited for cryogenic use because of its low viscosity. It is often used as a means of thermally anchoring cryogenic sensors as well as lubricating joints and o-rings. Contains high molecular weight polymeric hydrocarbon additive which gives it a tenacious, rubbery consistency allowing the grease to form a cushion between mating surfaces. Melting point is ≈316 K (43 °C). Use Xylene with Isopropyl alcohol rinse to remove it.
MAN-370 *	**Model 370 AC Resistance Bridge User's Manual.**
RM-1	**Rack Mounting Kit for Model 370 AC Resistance Bridge.** Hardware to attach one Model 370 to a 483 mm (19-inch) rack mount cabinet.
VGE-7031	**IMI-7031 Varnish (formerly GE 7031 Varnish) (1 pint can)**. IMI-7031 Insulating Varnish and Adhesive possesses electrical and bonding properties which, when combined with its chemical resistance and good saturating properties, make it an excellent material for cryogenic temperatures. As an adhesive, IMI-7031 bonds a variety of materials, has fast tack time, and may be air dried or baked. It is also an electrically insulating adhesive at cryogenic temperatures and is often used as a calorimeter cement. When soaked into cigarette paper, it makes a good, high thermal conductivity, low electrical conductivity heat sinking layer. Maximum operating temperature: 423 K (150 °C).
Wire	**Lake Shore Cryogenic Wire**. Lake Shore sells the following types of cryogenic wire: DT = Duo-Twist™, MN = Single Strand, MW = Manganin, NC = Nichrome Heater, ND = Heavy Duty, QL = Quad-Lead™, and QT = Quad-Twist™. **Lake Shore Coaxial Cable**. Lake Shore sells the following types of coaxial cable: CC = Ultra Miniature Coaxial Cable, SR = Semi-Rigid Coaxial Cable, CRYC = CryoCable™.

* Accessories included with a new Model 370.

† Accessories included with a new Model 3716, 3716/L and 3708 Scanner.

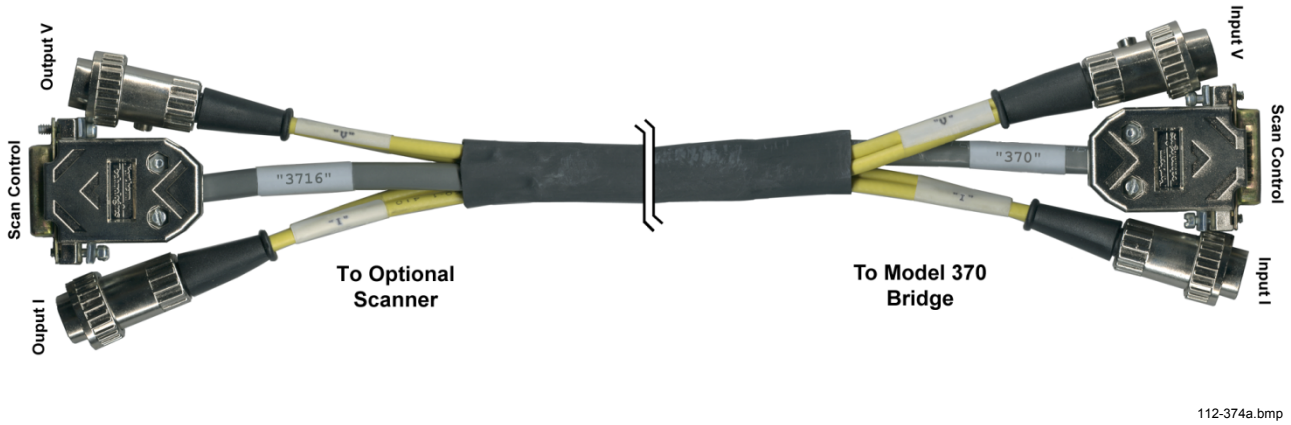

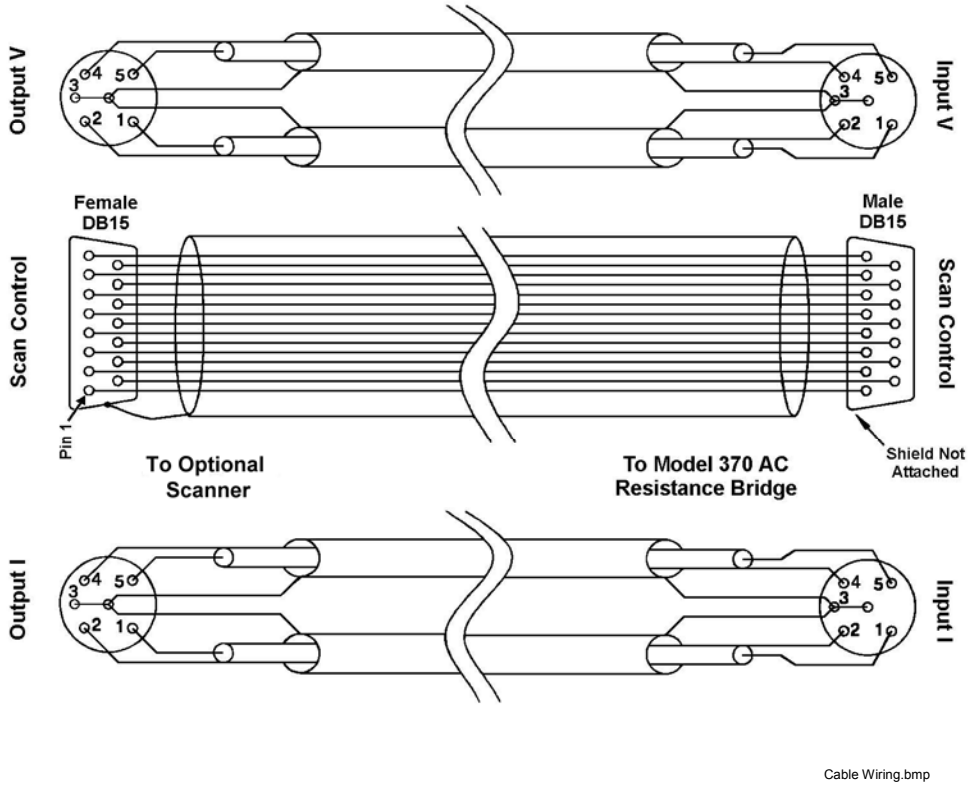

Figure 7-1. Model 112-374 Cable Assembly

CHAPTER 8

SERVICE

8.0 GENERAL

This chapter provides basic service information for the Model 370 AC Resistance Bridge. Customer service of the product is limited to the information presented in this chapter. Factory trained service personnel should be consulted if the instrument requires repair.

8.1 CONTACTING LAKE SHORE CRYOTRONICS

If a Lake Shore product was purchased through a dealer or representative, please use that resource for prompt sales or service information. When contacting Lake Shore directly, please specify the name of a department if do not know the name of an individual. Questions regarding product applications, price, availability and shipments should be directed to sales. Questions regarding instrument calibration or repair should be directed to instrument service. **Do not return a product to Lake Shore without an RGA number**. Refer to Paragraph 8.2. Contact information may change periodically but current contact information can always be found on the Lake Shore web site: www.lakeshore.com.

Mailing Address:	Lake Shore Cryotronics, Inc. Instrument Service Department 575 McCorkle Blvd. Westerville, OH USA 43082-8888	
E-mail Address:	sales@lakeshore.com service@lakeshore.com	Sales Instrument Service
Telephone:	614-891-2244 614-891-2243 ext. 131	Sales Instrument Service
Fax:	614-818-1600 614-818-1609	Sales Instrument Service

When contacting Lake Shore please provide your name and complete contact information including e-mail address if possible. It is often helpful to include the instrument model number and serial number (located on the rear panel of the instrument) as well as the firmware revision information as described in Paragraph 4.19.

8.2 RETURNING PRODUCTS TO LAKE SHORE

If it is necessary to return the Model 370 or accessories for recalibration, repair or replacement, a Return Goods Authorization (**RGA**) number must be obtained from a factory representative or from the Lake Shore web site. **Do not return a product to Lake Shore without an RGA number**. The following information must be provided to Lake Shore in order to obtain an RGA number.

1. Instrument model and serial number.
2. User name, company, address, phone number, and e-mail address.
3. Malfunction symptoms.
4. Description of the system in which the product is used.

If possible, the original packing material should be retained for reshipment. If not available, a minimum of three inches of shock adsorbent packing material should be placed snugly on all sides of the instrument in a sturdy corrugated cardboard box. The RGA number should be included in the mailing label or written prominently on the outside of the box. A copy of the customer contact information and RGA number should be included inside the box. Consult Lake Shore with questions regarding shipping and packing instructions.

8.3 FUSE DRAWER

The fuse drawer supplied with the Model 370 holds the instrument line fuses and line voltage selection module. The drawer holds two 5 × 20 mm time delay fuses. It requires two good fuses of the same rating to operate safely. Fuse ratings are different for different line voltages. Refer to Paragraph 8.5 for details.

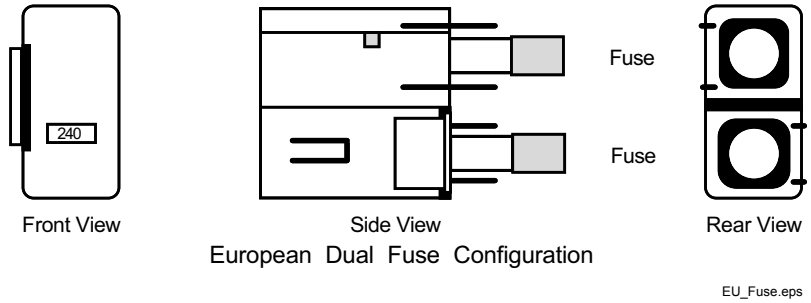

Figure 8-1. Fuse Drawer

8.4 LINE VOLTAGE SELECTION

Use the following procedure to change the instrument line voltage selector. Verify the fuse value whenever line voltage is changed.

WARNING: To avoid potentially lethal shocks, turn off controller and disconnect it from AC power before performing this procedure.

1. Identify the line input assembly on the instrument rear panel. See Figure 8-2.
2. Turn the line power switch OFF (**O**).
3. Remove the instrument power cord.
4. With a small screwdriver, release the drawer holding the line voltage selector and fuse.
5. Slide out the removable plastic fuse holder from the drawer.
6. Rotate the fuse holder until the proper voltage indicator shows through the window.
7. Verify the proper fuse value.
8. Re-assemble the line input assembly in the reverse order.
9. Verify the voltage indicator in the window of the line input assembly.
10. Connect the instrument power cord.
11. Turn the line power switch On (**I**).

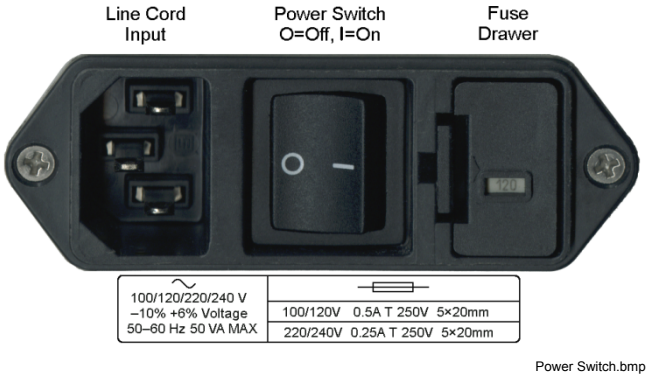

Figure 8-2. Power Fuse Access

8.5 FUSE REPLACEMENT

Use the following procedure to remove and replace the line fuses.

WARNING: To avoid potentially lethal shocks, turn off controller and disconnect it from AC power before performing these procedures.

CAUTION: For continued protection against fire hazard, replace only with the same fuse type and rating specified for the line for the line voltage selected.

NOTE: Test fuse with an ohmmeter. Do not rely on visual inspection of fuse.

1. Locate line input assembly on the instrument rear panel. See Figure 8-2.
2. Turn power switch Off (**O**).
3. Remove instrument power cord.
4. With a small screwdriver, release the drawer holding the line voltage selector and fuses.
5. Remove and discard both existing fuses. Replace with proper Slow-Blow (time-delay) fuse ratings as follows:

100/120V	0.5A T 250 V	5×20 mm
220/240V	0.25A T 250 V	5×20 mm

6. Re-assemble line input assembly in reverse order.
7. Verify voltage indicator in the line input assembly window.
8. Connect instrument power cord.
9. Turn power switch On (**I**).

8.6 ERROR MESSAGES

The following messages appear on the instrument display when it identifies a problem during operation. The messages are divided into three groups. Instrument hardware messages are related to the instruments internal circuits or non-volatile memory. If one of these messages persists after power is cycled the instrument requires repair or recalibration. Limit messages are most often associated with over voltage conditions caused by an improperly selected resistance range or excessive noise on the measurement leads. Paragraph 8.7 can be helpful in diagnosing these problems. If these messages persist after the input or output is configured properly the instrument may require repair. Illegal operation messages remind the operator when a feature is locked out or the instrument is not configured to support a feature.

Instrument Hardware

Defective NOVRAM	NOVRAM is defective and must be replaced
Invalid NOVRAM Contents	NOVRAM contents are corrupt and parameter values will be reset to default. Reoccurrence may indicate defective NOVRAM. Calibration is not affected.
Input Not Responding	Input microprocessor is not responding to main microprocessor. If the condition persists after power is cycled the instrument must be repaired.
Instrument Uncalibrated	Calibration memory has been corrupted. Recalibration is required for accurate measurements. See Paragraph 8.12 for calibration details.

Measurement or Compliance Limit

CS OVL	Current source overload possibly caused by a broken current source lead.
VCM OVL	Common mode overload at the first amplifier stage of the voltage input.
VDIF OVL	Overload at the differential amplifier stage of the voltage input.
VMIX OVL	Overload at the mixer (phase sensitive detector) stage of the voltage input.
R. OVER	Resistance range overload.
R. UNDER	Resistance range underload (equivalent of R. OVER in the negative direction) normally a result of improper lead wiring.
T. OVER	Measured resistance is outside of the temperature response curve on the high temperature end.
T. UNDER	Measured resistance is outside of the temperature response curve on the low temperature end.
Heater Open	Temperature control heater is too large or open circuited.

Error Messages (Continued)

Illegal Operation

Disabled	Scanner channel has been turned off and readings cannot be displayed.
Locked	Instrument keypad is locked and parameter value cannot be changed.
Control OFF	Temperature control it turned off and control parameter values cannot be accessed.
Still Not Selected	Analog Output 2 is not configured as still heater output.
NO CURVE	No curve is selected for the input so readings cannot be displayed in temperature.
(Negative Resistance)	Voltage and current lead polarity does not match.

8.7 TROUBLESHOOTING

It is likely through the course of installation and usage that the Model 370 will meet conditions that cannot yield a valid resistance reading. These conditions can usually be traced to environmental noise or misapplied measurement parameters. The instrument has been designed with features to simplify diagnosis of problems arising from these sources.

8.7.1 Overload Monitoring

At all times, there are four analog circuit areas of interest monitored by the firmware of the instrument to ensure that the measurement signals stay within useful limits. If any signal exceeds its limit, a descriptive overload message is displayed. An explanation of the error messages and likely causes follows.

8.7.1.1 CS OVL (Current Source Overload)

This message is displayed in the measurement window anytime the current source drive signal(s) into the current sample resistor(s) exceeds a 10 V peak limit. The overload can occur at either "CSPOS" or "CSNEG" points in the current source circuit. Refer to Figure 8-3 for the location of "CSPOS" and "CSNEG" monitoring points. The signal voltage at either monitoring point can be viewed on an oscilloscope by using the Monitor output described in Paragraph 4.7.4.

Usual causes of this error include:

1. An attempt to measure a resistance that is much greater (3 orders of magnitude) than the selected range.
2. An open connection of the current drive leads (I+ and/or I–).

To resolve this condition, first verify that a reasonable resistance range has been selected for the measurement. Next, verify the integrity of current lead connections to the measured resistance.

8.7.1.2 VCM OVL (Common Mode Overload)

Even though differential mode noise may be fully under control by using twisted leads and appropriate shielding, it is still possible to have enough common-mode noise coupled to the measurement leads to exceed the common mode voltage limits of the input instrumentation amplifier. If the combination of signal and common-mode noise components exceeds 10 V peak, the common-mode overload error (VCM OVL) is displayed. The overload can occur at either "VCMPOS" or "VCNEG" points in the instrumentation amplifier circuit. Refer to Figure 8-3 for the location of "VCMPOS" and "VCNEG" monitoring points. The signal voltage at either monitoring point can be viewed on an oscilloscope by using the Monitor output described in Paragraph 4.7.4.

Usual causes for this error include:

1. Improperly shielded measurement leads.
2. An improperly grounded Dewar case.

To resolve this condition, first verify that the experimental Dewar case is properly connected to the instrument measurement common and earth ground (Paragraph 3.4.4). Next, verify the integrity of the measurement lead shields. Use of the Common Mode Reduction (CMR) feature of the Model 370 reduces this effect electronically. It is particularly effective at excitation currents above 1 μA.

8.7.1.3 VDIF OVL (Differential Overload)

The input stage of the voltage measurement side of the instrument is a very high input impedance instrumentation amplifier with a high gain of 1000 (10 at voltage excitations of 20 mV and above). If the combination of signal and differential noise components cause the output of this stage to exceed 10 V peak, the differential overload error (VDIF OVL) is displayed. The overload occurs at the "VDIF" point in the instrumentation amplifier circuit. Refer to Figure 8-3 for the location of the "VDIF" monitoring point. The signal voltage can be viewed on an oscilloscope by using the Monitor output described in Paragraph 4.7.4.

Usual causes of this error include:

1. An attempt to measure a resistance that is much greater (2 orders of magnitude) than the selected range.
2. An open connection of one or both of the voltage measurement leads.
3. Significant differential noise on current and/or voltage leads.

To resolve this condition, first verify that a reasonable resistance range has been selected for the measurement. Next, verify the integrity of the voltage lead connections to the measured resistance. If the error persists, verify that the voltage pair of leads is twisted and shielded. Likewise, the current pair of leads should be twisted and shielded. Twisted pair wiring reduces the differential signals potentially created by environmental noise. However, there is no advantage gained by twisting the current pair of leads together with the voltage pair of leads. When twisted leads are not an option (inside a Dewar), the shielding must be verified adequate for the task. The Dewar itself can act as a shield when the case is properly connected. Ensure that the experimental Dewar case is properly connected to the measurement common of the instrument and earth ground. Refer to Installation Paragraph 3.4.4.

8.7.1.4 VMIX OVL (Mixer Overload)

Between the instrumentation amplifier section and the mixer portion of the phase sensitive detector are several gain stages and a band-pass filter. If the combination of signal and all differential noise components cause the input to the mixer to exceed 10 V peak, the mixer overload error is displayed. The overload occurs at the "VMIX" point in the instrumentation amplifier circuit. Refer to Figure 8-3 for the location of the "VMIX" monitoring point. The signal voltage can be viewed on an oscilloscope by using the Monitor output described in Paragraph 4.7.4. This ensures linear operation within the phase-sensitive detector. This is likely to be the most common error message displayed. It is not uncommon to see this error temporarily when changing measurement parameters.

Usual causes for this error are include:

1. A temporary transient during current, voltage or range change.
2. An attempt to measure a resistance that is greater (1 order of magnitude) than the selected range.
3. A differential noise level that is lower than the "VDIF" overload level but high enough after the gain stages to exceed the dynamic range of the phase-sensitive detector.

To resolve this condition, first verify that a reasonable resistance range has been selected for the measurement. Next, verify the integrity of the voltage lead connections to the measured resistance. If the error persists, verify that the voltage pair of leads is twisted and shielded. Likewise, the current pair of leads should be twisted and shielded. Twisted pair wiring reduces the differential signals potentially created by environmental noise. However, there is no advantage gained by twisting the current pair of leads together with the voltage pair of leads. When twisted leads are not an option (inside a Dewar), the shielding must be verified adequate for the task. The Dewar itself acts as a shield when the case is properly connected. Ensure that the experimental Dewar case is properly connected to the measurement common of the instrument and earth ground. Refer to Installation Paragraph 3.4.4.

8.7.1.5 R. OVER (Range Over)

This message indicates that the selected resistance range is lower than that required for the measured resistance. To resolve the condition, simply increase the resistance range.

8.7.1.6 R. UNDER (Range Under)

This message indicates two simultaneous problems:

1. Either the current leads or the voltage leads are reversed in the + and – sense.
2. The selected range is lower than that required for the measured resistance. To resolve the condition, correct the sensor wiring and increase the resistance range as needed.

NOTE: As a test, just increasing the resistance range will remove the error message but a "negative" resistance will be displayed.

8.7.2 Signal Level Troubleshooting

The Model 370 provides user access to all the error monitoring points in the circuit for troubleshooting convenience. Access to these points is provided through the MONITOR output BNC connector on the back of the instrument. To select the desired monitoring point, refer to Paragraph 4.7.4 (Monitor Output Voltages). The Reference output provides an excellent means to trigger the oscilloscope when looking at the measurement AC signal in the presence of noise. Be aware that the attachment of an earth-grounded oscilloscope to the Monitor and/or Reference output jacks may induce ground loop related noise into the system that is not normally present. Conversely, it is also possible that the addition of the grounding path through the oscilloscope may actually quiet an improperly grounded system. If in doubt, a differential input to the oscilloscope should be used. A battery-operated oscilloscope is another option.

8.7.2.1 Nominal Signal Levels

Measuring a 100 kΩ resistor at a voltage excitation of 632 mV, resistance range of 200 kΩ, and CMR on, measuring a "balanced " (or floating) resistance, the following AC sine-wave signals will be observed at the appropriate signal points:

CSPOS	4.5 VAC Peak
CSNEG	4.5 VAC Peak
VCMPOS	0.224 VAC Peak
VCMNEG	0.224 VAC Peak
VDIF	4.5 VAC Peak
VMIX	1.4 VAC Peak
VAD	1 VDC
OFF	No signal

The given levels may vary by 1 or 2%. At the above levels, the observed sine wave should be very clean and noise free. These signal levels are representative of a "balanced" resistance measurement. If one side of the measured resistance is common to measurement common, large deviations from these voltages will be seen. Also, be reminded that CMR must be turned off in that condition for an accurate measurement.

As excitation is reduced, environmental noise will be seen on the signals. At voltage excitations below 200 µV, the measurement signal levels at CSPOS, CSNEG, VCMPOS and VCMNEG get small enough that a common oscilloscope my not adequately see the measurement signal. However, common mode noise may be quite visible on the CSPOS and CSNEG signals.

8.7.2.2 Noise Signals

In actual installation, the Monitor output can be used to determine the character of offending noise. Observed signals will include the measurement signal (13.7 Hz. sine wave) and any noise signals combined. Front panel selection (refer to Paragraph 4.7.4) allows monitoring of different points along the analog circuit path. The following describes noise characteristics backing up through the measurement circuit from the most processed signal to the least processed signal.

The VAD signal is the output of the phase sensitive detector circuit and is a DC representation (range ±2.50VDC) of the measurement. It is the signal that is directly converted by the Analog to Digital converter for digital processing and display. This point is conditioned by a 4-pole low-pass filter (TC = 0.5 sec) so the fundamental 13.7 Hz. (and harmonics) along with any 50/60 Hz. related signals and other noise signals are greatly attenuated. Any DC offset at this point is subtracted in the digital domain. This means that a small DC voltage offset (several mV or so) may be present at this monitoring point. A DC voltage exceeding +2.50VDC triggers a "R. OVER" message. Bear in mind that this signal is capable of going negative, directly indicating a reversal of current or voltage leads to the measured resistor. A "negative" resistance display will occur in this condition. A DC voltage exceeding –2.50VDC (in the negative direction) triggers a "R. UNDER" message.

Noise Signals (Continued)

The VMIX monitor point is the most revealing under normal circumstances and should be examined first. The Model 370 uses an analog passband filter (–3db, 1 – 40 Hz.) to reduce response to 50/60 Hz. but cannot eliminate all of it. Therefore, it is useful to observe the signal at measurement levels to discern if wiring changes are resulting in improvements or not. Bear in mind that any signal observed at this point is differential in nature and impressed across the measured resistor, possibly heating it. VMIX is an excellent point to monitor for grounding change effects. At extremely low levels (10 µV and below) residual electronic noise shows as random fluctuations without a repeating character. A level exceeding 10 V peak at this point triggers a "VMIX OVL" message.

The VDIF monitor point is taken ahead of the gain and passband sections. This point allows broadband monitoring for all differential sources of noise that are impressed across the measured resistor including higher frequencies that the passband filter attenuated. These frequencies might be computer generated, power harmonic related or even radio frequencies (<1 MHz.). As with VMIX, signals observed at this point are differential in nature and impressed across the measured resistor, possibly heating it. A level exceeding 10 V peak at this point triggers a "VDIF OVL" message.

Common-mode voltage can be observed at the CMPOS and CMNEG monitoring points. The normal signal level is very small at these points and may not be easily observed when measuring at low excitations. Although the Model 370 largely ignores common-mode noise, there may be a large enough signal to cause a problem. If a "VCM OVL" message is displayed, the signal character of the offending noise can be observed and verified gone after repair. This is usually due to poor shielding and/or grounding as discussed in Paragraph 3.4. A level exceeding 10 V peak at these points trigger a "VCM OVL" message.

The current source drive to the current sampling resistors of the current source section can be observed using CSPOS and CSNEG monitor points. This signal shows predominately the controlling sine wave signal applied to the current sampling resistors but will also give good insight in to common-mode noise voltages that are reflected back through the current source. A level exceeding 10 V peak at these points triggers a "CS OVL" message.

8.7.2.3 Phase Relationship

The design of the Model 370 includes a phase sensitive detector that uses a reference signal directly derived from the oscillator section to demodulate the voltage signal from the measured resistor. The Reference signal is brought out to the back of the instrument next to the Monitor jack. The phase relationship of these two signals is critical to the accuracy of the measurement. Common installations at resistance levels of 100k or less are not likely to have difficulty with the phase relationship of the two signals. As resistance and/or cable length increases so should concern for this relationship. Cable capacitance is the single biggest cause of this error (Refer to Paragraph 2.6.6).

The Model 370 has a means to observe the phase shift caused by cable capacitance by observing the VMIX monitor point and comparing it against the Reference output. The Reference output can either be used to sync an oscilloscope for observation of the VMIX signal or the two signals can be x-y plotted to observe the aperture width of the pattern as an indicator of phase. A simple application of the feature is the observation of phase improvement by the use of driven guards on the measurement leads. The change can be observed immediately as the guard drive is turned on or off. Judicious use of this feature with external instrumentation can even extend the range of the Model 370 measurement into reactive (capacitive/inductive) areas.

8.7.3 Considerations for the Model 3708 Scanner

The Model 3708 Scanner was released after the Model 370 was released. The firmware in older Model 370's may need to be updated to properly work with the Model 3708 Scanner. Refer to section 4.19 to check with the firmware revision. In order for the Model 3708 Scanner to function properly, the main firmware needs to have a date of 4/10/2008 or newer and the input firmware needs to be version 2.0 or newer. Contact Lake Shore service if the firmware needs to be updated.

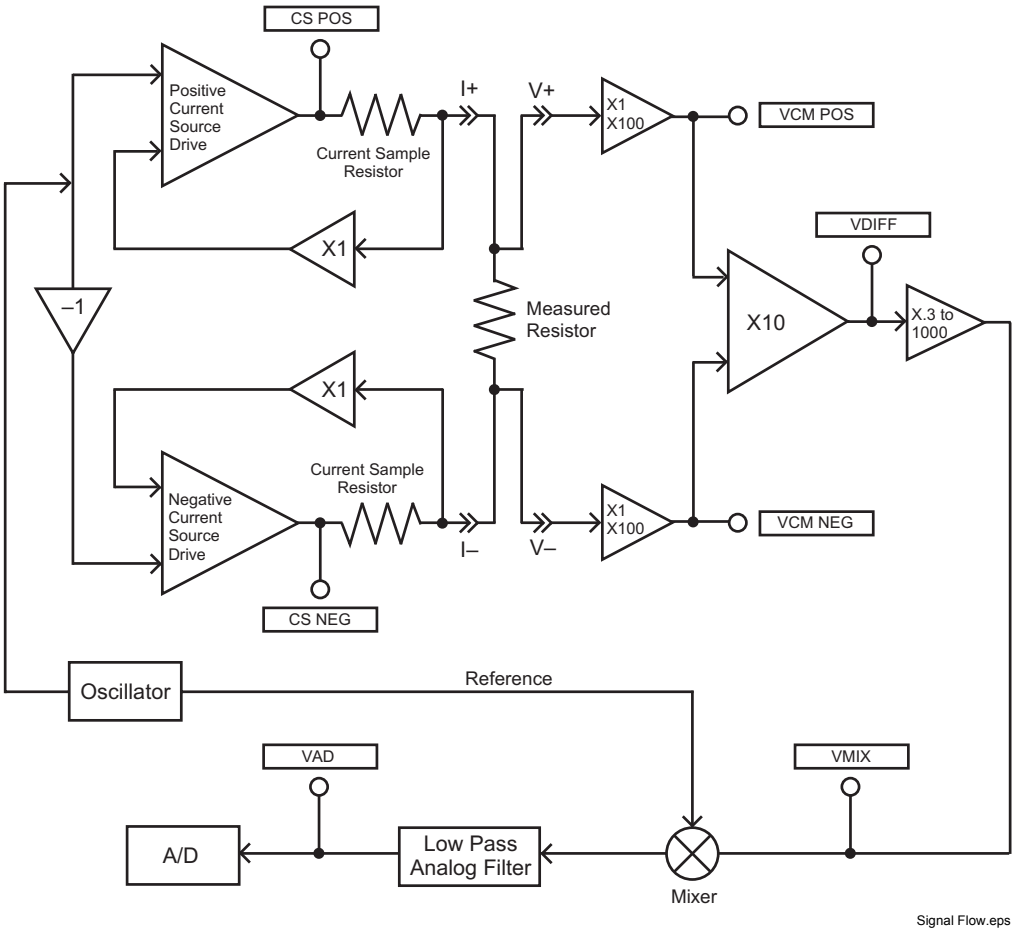

Figure 8-3. Signal Flow Block Diagram

8.8 ENCLOSURE TOP REMOVAL AND REPLACEMENT

WARNING: To avoid potentially lethal shocks, turn off controller and disconnect it from AC power line before performing this procedure. Only qualified personnel should perform this procedure.

REMOVAL

1. Set power switch to Off (**O**) and disconnect power cord from rear of unit.
2. If attached, remove 19-inch rack mounting brackets.
3. Use a Phillips screwdriver to remove 4 flat-head screws centered front & rear on the top & bottom of the enclosure.
4. Use 5/64 hex key to remove 4 screws attaching top panel to unit.
5. Use 5/64 hex key to loosen 4 screws attaching bottom panel to unit.
6. Carefully remove the back bezel by sliding it straight back away from the unit.
7. Slide the top panel back and remove it from the unit.

INSTALLATION

1. Slide the top panel forward in the track provided on each side of the unit.
2. Carefully replace the back bezel by sliding it straight into the unit.
3. Use a Phillips screwdriver to install 4 flat-head screws centered front & rear on the top & bottom of the enclosure.
4. Use 5/64 hex key to install 4 screws attaching top panel to unit.
5. Use 5/64 hex key to tighten 4 screws attaching bottom panel to unit.
6. If required, reattach 19-inch rack mounting brackets.
7. Connect power cord to rear of unit and set power switch to On (**I**).

8.9 ELECTROSTATIC DISCHARGE

Electrostatic Discharge (ESD) may damage electronic parts, assemblies, and equipment. ESD is a transfer of electrostatic charge between bodies at different electrostatic potentials caused by direct contact or induced by an electrostatic field. The low-energy source that most commonly destroys Electrostatic Discharge Sensitive (ESDS) devices is the human body, which generates and retains static electricity. Simply walking across a carpet in low humidity may generate up to 35,000 volts of static electricity.

Current technology trends toward greater complexity, increased packaging density, and thinner dielectrics between active elements, which results in electronic devices with even more ESD sensitivity. Some electronic parts are more ESDS than others. ESD levels of only a few hundred volts may damage electronic components such as semiconductors, thick and thin film resistors, and piezoelectric crystals during testing, handling, repair, or assembly. Discharge voltages below 4000 volts cannot be seen, felt, or heard.

8.9.1 Identification of Electrostatic Discharge Sensitive Components

The following are various industry symbols used to label components as ESDS.

8.9.2 Handling Electrostatic Discharge Sensitive Components

Observe all precautions necessary to prevent damage to ESDS components before attempting installation. Bring the device and everything that contacts it to ground potential by providing a conductive surface and discharge paths. As a minimum, observe these precautions:

1. De-energize or disconnect all power and signal sources and loads used with unit.
2. Place unit on a grounded conductive work surface.
3. Ground technician through a conductive wrist strap (or other device) using 1 MΩ series resistor to protect operator.
4. Ground any tools, such as soldering equipment, that will contact unit. Contact with operator's hands provides a sufficient ground for tools that are otherwise electrically isolated.
5. Place ESDS devices and assemblies removed from a unit on a conductive work surface or in a conductive container. An operator inserting or removing a device or assembly from a container must maintain contact with a conductive portion of the container. Use only plastic bags approved for storage of ESD material.
6. Do not handle ESDS devices unnecessarily or remove from the packages until actually used or tested.

8.10 FIRMWARE REPLACEMENT

There are three integrated circuits (ICs) that may potentially require replacement. See Figure 8-4 for IC locations.

- Input Microcontroller (U14) – Contains software that configures the inputs, takes readings, and performs control functions. Has a sticker on top labeled "M370IF.HEX" and a version number.
- Main Firmware Erasable Programmable Read Only Memory (EPROM) (U104) – Contains the user interface software. Has a sticker on top labeled "M370MF.HEX" and a date.
- Non-Volatile Random Access Memory (NOVRAM) (U107) – Contains instrument settings and user curves. The NOVRAM is replaced when the customer purchases a Model 8002-05-370 CalCurve™. Refer to Paragraph 7.2.

Use the following procedure to replace any of these ICs.

1. Follow the top of enclosure *REMOVAL* procedure in Paragraph 8.8.
2. Locate the IC on the main circuit board. See Figure 8-4. Note orientation of existing IC.

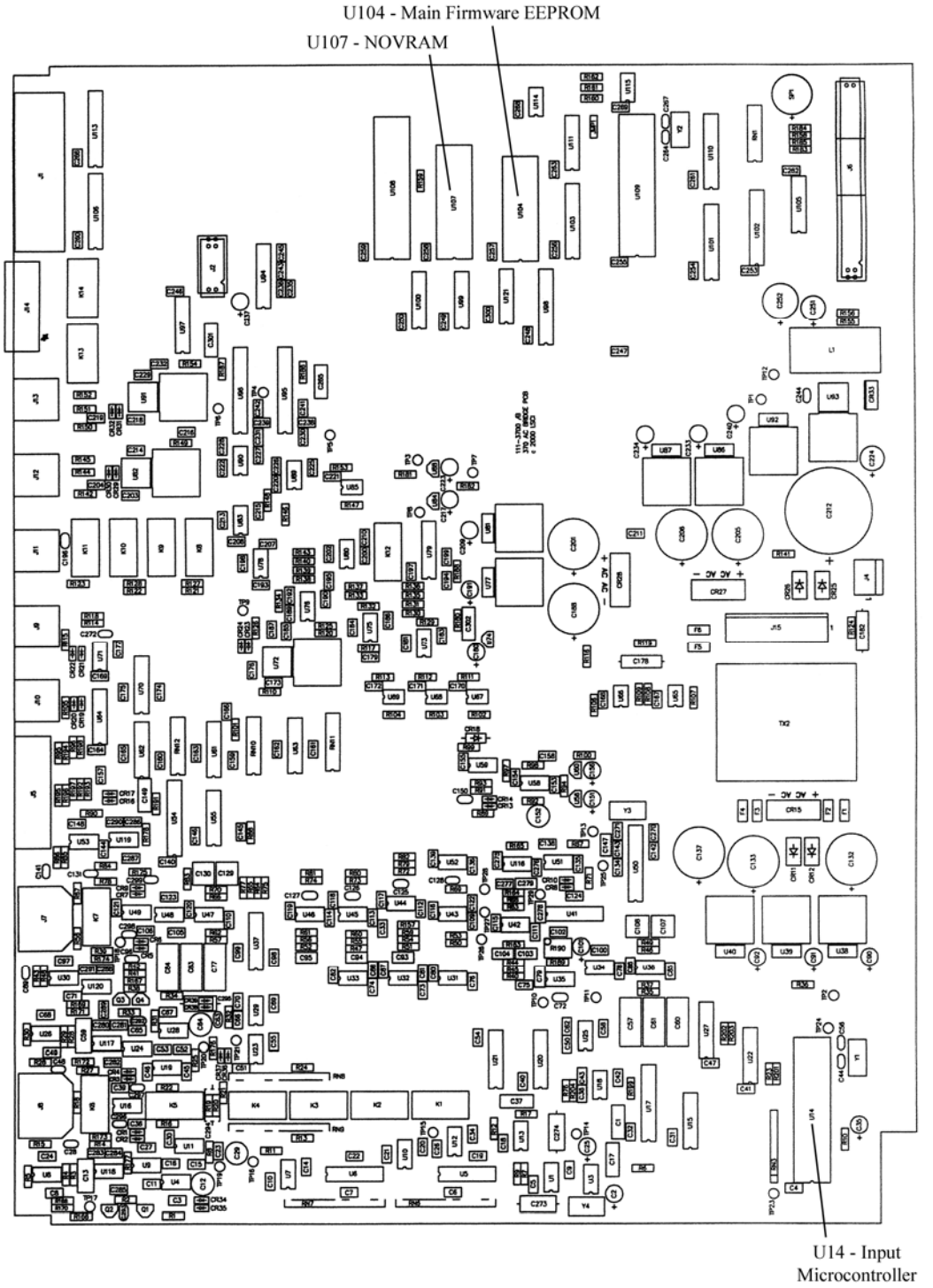

PCB Layout.bmp

Figure 8-4. Location Of Important Internal Components

Firmware Replacement (Continued)

CAUTION: The ICs are Electrostatic Discharge Sensitive (ESDS) devices. Wear shock-proof wrist straps (resistor limited to <5 mA) to prevent injury to service personnel and to avoid inducing an Electrostatic Discharge (ESD) into the device.

3. Use IC puller to remove existing IC from the socket.
4. Noting orientation of new IC, use an IC insertion tool to place new device into socket.

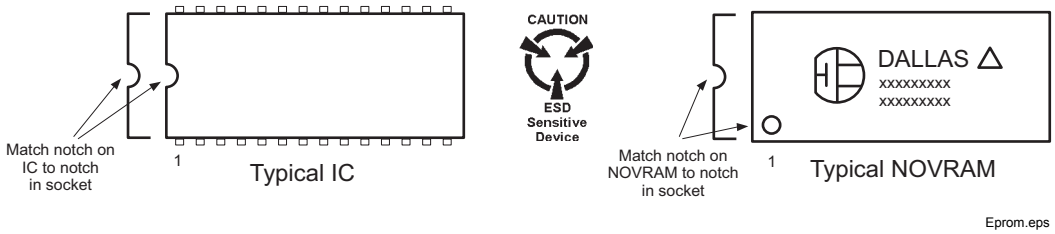

5. Follow the top of enclosure *INSTALLATION* procedure in Paragraph 8.8.

8.11 CONNECTOR AND CABLE DEFINITIONS

The SCAN CONTROL, INPUT, REFERENCE, MONITOR, HEATER OUTPUT, ANALOG OUTPUT 1 and 2 (STILL), ALARM RELAYS, and RS-232 (DTE) connectors are defined in Figures 8-5 thru 8-11.

Pin	Name	Description
1	Scan Present	Signal to Model 370 that a scanner is installed
2	Digital Common	Common or ground for digital control signals
3	Digital Common	
4	Unused	
5	Analog Common	Common or ground for analog signals
6	Analog Common	
7	Analog Common	
8	–15 V	–15 V referenced to scanner analog common
9	Scan 1	Scan channel select line 1
10	Scan 2	Scan channel select line 2
11	Scan 3	Scan channel select line 3
12	Scan 4	Scan channel select line 4
13	Scan Gain	Selects scanner gain of 1 or 100
14	+5 V	+5 V referenced to scanner digital common
15	+15 V	+15 V referenced to scanner analog common
Body	Chassis	(Do Not Use)

Figure 8-5. SCAN CONTROL Connector Details

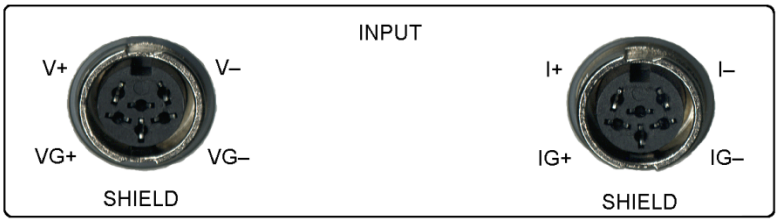

Input Connectors.bmp

Pin	Voltage Connector		Current Connector	
1	V–	Voltage –	I–	Current –
2	VG–	Voltage Guard –	IG–	Current Guard –
3	SHIELD	Shield	SHIELD	Shield
4	VG+	Voltage Guard +	IG+	Current Guard +
5	V+	Voltage +	I+	Current +
6	None	Not Used	None	Not Used

Figure 8-6. Resistor Sensor INPUT Connectors

MonitorRefOutputs.bmp

Pin	Description
Center	Signal
Shell	Ground

Figure 8-7. REFERENCE and MONITOR Connector Details

Heater Output.bmp

Pin	Description
Center	Signal
Shell	Ground

Figure 8-8. HEATER OUTPUT Connector Details

Analog Outputs.bmp

Pin	Description
Center	Signal
Shell	Ground

Figure 8-9. ANALOG OUT 1 and 2 (STILL) Connector Details

Alarm Relays.bmp

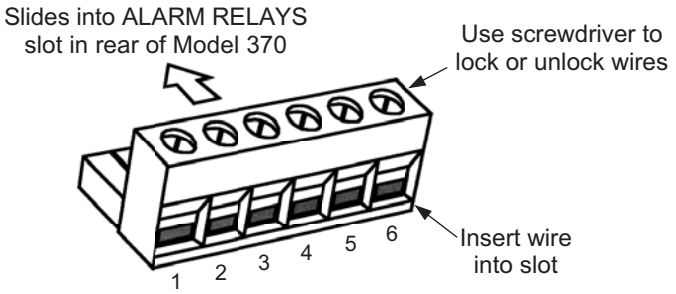

Temrinal Block.eps

Pin	Description	
1	LNO	Low Alarm Relay Normally Open
2	LCOM	Low Alarm Relay Common
3	LNC	Low Alarm Relay Normally Closed
4	HNO	High Alarm Relay Normally Open
5	HCOM	High Alarm Relay Common
6	HNC	High Alarm Relay Normally Closed

Figure 8-10. ALARM RELAYS Terminal Block

Serial Connector.bmp

Model 370 AC Resistance Bridge		Typical Computers			
DE-9P (DTE)		DB-25P (DTE)		DE-9P (DTE)	
Pin	Description	Pin	Description	Pin	Description
1	No Connection	2	TD (out)	1	DCD (in)
2	Receive Data (RD in)	3	RD (in)	2	RD (in)
3	Transmit Data (TD out)	4	RTS (out)	3	TD (out)
4	Data Terminal Ready (DTR out)	5	CTS (in)	4	DTR (out)
5	Ground (GND)	6	DSR (in)	5	GND
6	Data Set Ready (DSR in)	7	GND	6	DSR (in)
7	Data Terminal Ready (DTR out) (tied to 4)	8	DCD (in)	7	RTS (out)
8	No Connection	20	DTR (out)	8	CTS (in)
9	No Connection	22	Ring in (in)	9	Ring in (in)

Figure 8-11. RS-232 (DTE) Connector Details

8.11.1 Serial Interface Cable Wiring

The following are suggested cable wiring diagrams for connecting the Model 370 Serial Interface to various Customer Personal Computers (PCs).

Model 370 to PC Serial Interface – PC with DE-9P

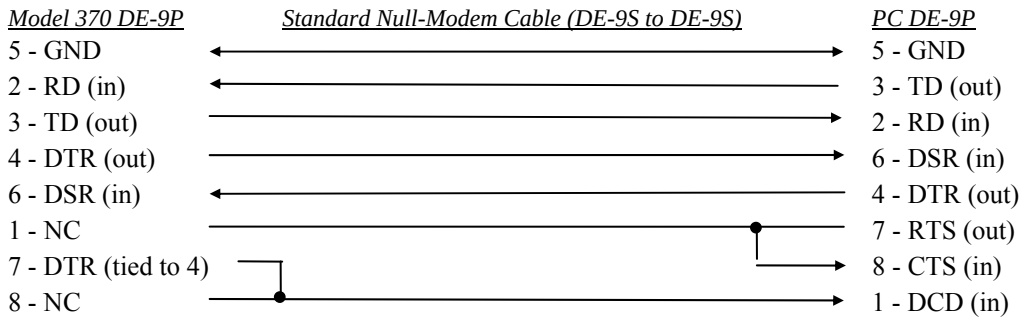

Model 370 to PC Serial Interface – PC with DB-25P

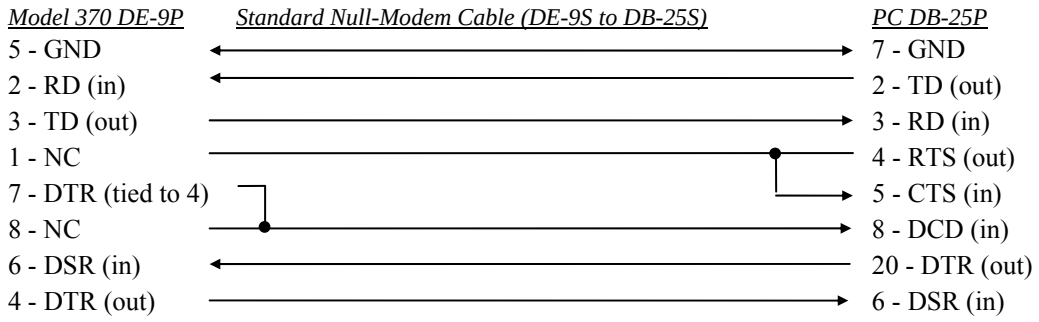

Model 370 to PC Interface using Null Modem Adapter

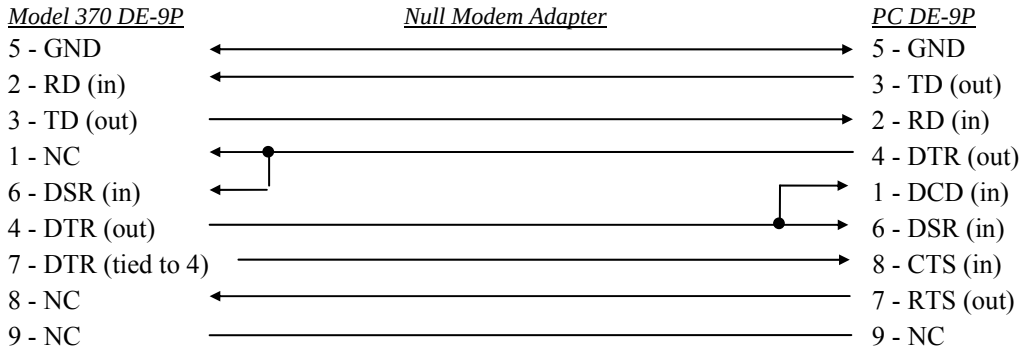

NOTE: Same as null modem cable design except PC CTS is provided from the Model 370 on DTR.

8.11.2 IEEE-488 Interface Connector

Connect to the IEEE-488 Interface connector on the Model 370 rear with cables specified in the IEEE-488-1978 standard document. The cable has 24 conductors with an outer shield. The connectors are 24-way Amphenol 57 Series (or equivalent) with piggyback receptacles to allow daisy-chaining in multiple device systems. The connectors are secured in the receptacles by two captive locking screws with metric threads.

The total length of cable allowed in a system is 2 meters for each device on the bus, or 20 meters maximum. The Model 370 can drive a bus of up to 10 devices. A connector extender is required to use the IEEE-488 Interface and Relay Terminal Block at the same time. Figure 8-12 shows the IEEE-488 Interface connector pin location and signal names as viewed from the Model 370 rear panel.

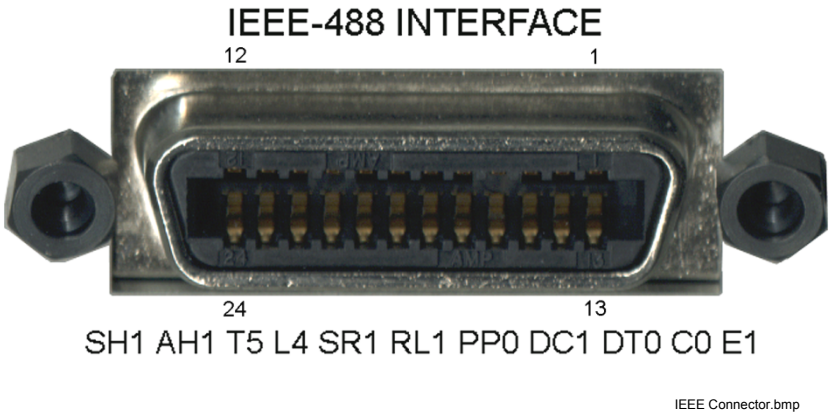

PIN	SYMBOL	DESCRIPTION
1	DIO 1	Data Input/Output Line 1
2	DIO 2	Data Input/Output Line 2
3	DIO 3	Data Input/Output Line 3
4	DIO 4	Data Input/Output Line 4
5	EOI	End Or Identify
6	DAV	Data Valid
7	NRFD	Not Ready For Data
8	NDAC	Not Data Accepted
9	IFC	Interface Clear
10	SRQ	Service Request
11	ATN	Attention
12	SHIELD	Cable Shield
13	DIO 5	Data Input/Output Line 5
14	DIO 6	Data Input/Output Line 6
15	DIO 7	Data Input/Output Line 7
16	DIO 8	Data Input/Output Line 8
17	REN	Remote Enable
18	GND 6	Ground Wire – Twisted pair with DAV
19	GND 7	Ground Wire – Twisted pair with NRFD
20	GND 8	Ground Wire – Twisted pair with NDAC
21	GND 9	Ground Wire – Twisted pair with IFC
22	GND 10	Ground Wire – Twisted pair with SRQ
23	GND 11	Ground Wire – Twisted pair with ATN
24	GND	Logic Ground

Figure 8-12. IEEE-488 Rear Panel Connector Details

8.12 MODEL 370 CALIBRATION

The following paragraphs provide calibration information for the Model 370 AC Resistance Bridge. Calibration information for the Model 3716 Scanner follows in Paragraph 8.13. There are three features of the Model 370 that can be calibrated, the resistance measurement, analog voltage outputs and heater output. All of these calibrations are done through computer interface and the calibration constants are stored in non-volatile memory. There are no "trim-pots" inside the Model 370 and the cover does not have to be removed to calibrate the instrument. In contrast, the Model 3716 scanner is calibrated with a single trim-pot that is accessible from the scanner front panel.

8.12.1 Calibration Interface

Computer interface commands are included in the Model 370 specifically for calibration. These commands work with either the IEEE-488 or RS-232C interface. A complete description of each command is included in Paragraph 8.12.5. Communication must be established between the instrument and a computer before calibration can be attempted. Some time should be spent becoming familiar with the following commands before beginning a calibration. The RDGR and RDGRNG commands are also important to calibration.

CALZ/CALZ? Send or query the zero offset calibration coefficient for a measured input or calibrated output. (The measurement current source does not require zero offset coefficients.) The zero offset is in the same units as the input or output being calibrated and the default value is 0.

CALG/CALG? Send or query the gain coefficient for a measured input or calibrated output. The gain coefficient is a ratio of actual and ideal input or output and the default value is 1.

CALVIN? Query the voltage measured at the instrument input for calibration of voltage measurement ranges. Note: This value is not filtered.

CALSAVE Issue the CALSAVE command to save any new calibration coefficients in non-volatile memory.

It is always recommended to read out old calibration coefficients using the CALZ? and CALG? interface queries before attempting to calibrate. This will give the operator experience with the interface command, data formatting and typical values. If the old values are saved, they can be reloaded in the case of accidental loss of data during calibration. New calculated calibration coefficients should be very similar to the old values. Discrepancy between the old and new values of more than 0.1% of gain calibration coefficients or 0.1% of range for zero coefficients could indicate an error in the calibration procedure or a hardware failure. Do not attempt to recalibrate a damaged instrument.

The instrument will use the new calibration coefficients as soon as they are sent with the either the CALZ or CALG interface command but they are not saved permanently until the CALSAVE command is issued. If a mistake is made in the calibration process, turn the instrument power off and on again before CALSAVE is issued to restore the old calibration constants. Once CALSAVE is issued, old values cannot be retrieved from the instrument.

If calibration coefficients are left at default or are outside of the normal calibration range, the following error message will appear in the instrument display when the instrument is turned on: "Instrument Uncalibrated." This error message must be bypassed to allow calibration of the instrument. Press both Enter and Escape keys simultaneously to bypass the error message. Operation in this state is possible but at least one calibration is known to be out of proper range and measurement is likely to be erroneous.

8.12.2 Resistance Measurement Calibration

A complete measurement calibration of the Model 370 is very complex and time consuming. Make sure calibration is necessary before returning the instrument for calibration or attempting to calibrate it. Verify the instrument accuracy by comparing measurements of resistive standards to the specifications in Chapter 1 of this manual. Calibrating only the current settings and voltage ranges that are actually being used can save significant time and effort. Lake Shore recommends returning the instrument to the factory whenever an instrument is damaged or a complete calibration is necessary.

Calibration coefficients for the measurement are used by the instrument firmware to compute an accurate resistance reading. The sourced current and voltage at the instrument A/D converter do not change as a result of calibration. The equation for calculating resistance is as follows:

Calibrated Resistance (RDGR?) = [(A/D Voltage/Ideal Gain) – CALZ(V)) × CALG(V)]/(Ideal Current/CALG(I))

Resistance Measurement Calibration (Continued)

The **CALVIN?** query returns only the voltage part of the equation so that current and voltage contributions can be separated for calibration. The voltage represented is the voltage at the input terminals (V+, V–) of the instrument. The equation for CALVIN is as follows:

Calibrated Voltage (CALVIN) = [(A/D Voltage / Ideal Gain) – CALZ(V)) × CALG(V)]

The fundamental relationship between current, voltage and resistance is straightforward but the interaction of the calibration coefficients should be noted. The measurement input allows calibration of 22 individual current gains and 12 voltage ranges with zero offset and gain. (Calibration can be performed on voltage ranges and current settings shown in Table 1-1 but not all combinations can be selected during operation.) This results in 46 calibration coefficients for the input alone. This approach was chosen because calibrating each possible combination of voltage range and current would require 528 coefficients. Even the chosen method has difficulties. Some of the voltages and currents are so small that they cannot be measured with conventional calibration equipment. After the basic calibration technique is described, a method is described in Paragraph 8.12.2.6 for using the Model 370 and known resistances to perform a calibration.

8.12.2.1 Voltage Measurement Zero Offset

To calibrate voltage zero offset perform the following sequence of operations. Voltage zero offset must be calibrated before voltage gain.

1. Create an input short by connecting all four voltage and current measurement leads together (V+, V–, I+, I–). Lead wires should be kept as short as possible and soldered together. Spring tension lead clips will not make appropriate connections.
2. Attach the input short to the instrument and allow it to warm up for 1 hour.
3. Select the highest voltage range (632 mV) and the highest resistance (lowest current) range available for that voltage range (63.2 MΩ/10 nA for the highest range).
4. Use the CALZ? and CALG? queries to read and record the coefficients for the selected voltage range. (A safety step to revert to the original calibration if necessary)
5. Set the CALZ and CALG coefficients for the selected Voltage range to default (0 and 1). (The current source CALG coefficient does not have to be set to default (1) for this operation.)
6. Read the short circuit voltage for the range using the CALVIN? query. Sufficient settling time and filtering must be used to obtain a stable reading. Refer to Paragraph 8.12.2.6 for practical filter time constants. The CALVIN reading is not filtered with the instrument filter feature. The voltage read should be 0 volts, ±0.02% of the voltage range.
7. Send the value read with the CALVIN? query as the CALZ coefficient. Example for the highest voltage range: **CALZ 2, 12, +12.3456E-6**
8. Send the CALSAVE command and wait 10 seconds for the calibration to be saved in non-volatile memory. (Alternately, this step can be done after all ranges are calibrated.)
9. Select the next lowest voltage range and repeat from Step 3 until all ranges are calibrated. Refer to Paragraph 8.12.2.6 for voltage range numbers.

NOTE: Lower voltage ranges (especially below 200 µV) require long filter time constants to obtain a stable zero offset measurement. Zero offsets for ranges below the highest range can be calculated instead of being measured. To calculate zero offsets of lower ranges, scale the last measured offset by the difference in ideal gain on the consecutive ranges. For example divide by 3.16228, 10, 31.6228, 100 and so on.

8.12.2.2 Voltage Measurement Gain

To calibrate voltage gain, perform the following sequence of operations. Voltage Gain must be calibrated after voltage zero offset because the voltage zero offset procedure sets the gain coefficient to default.

1. Attach a 20 Ω resistor to the input of the instrument with short leads.
2. Allow the instrument to warm up for 1 hour.
3. Select the highest voltage range (632 mV) and the 20 Ω resistance range.
4. Use the CALG? query to read and verify that the gain coefficient for the selected voltage range has been set to default during zero calibration.

5. Read the AC RMS voltage across the 20 Ω resistor with a digital volt meter (DVM) and record the measured voltage reading. The DVM must be capable of accurate measurements at 13.7 Hz.
6. Read the voltage from the instrument using the CALVIN? query. Sufficient settling time and filtering must be used to obtain a stable reading. Refer to Paragraph 8.12.2.6 for practical filter time constants. The CALVIN reading is not filtered with the instrument filter feature.
7. Calculate the gain coefficient value for the voltage range by the following: CALG = Voltage DVM/CALVIN. The gain coefficient should be +1.01 ±2%.
8. Send the gain coefficient to the instrument using the CALG command. Example for the highest voltage range: **CALG 2, 12, +1.01212E+0**
9. Send the CALSAVE command and wait 10 seconds for the calibration to be saved in non-volatile memory. (Alternately, this step can be done after all ranges are calibrated.)
10. This process can be repeated on lower voltage ranges until the accuracy of the DVM falls below the specified accuracy of the instrument. With most DVMs the highest range is the only range that can be calibrated in this manner. Paragraph 8.12.2.6 gives an example of how to use the instrument itself and known resistance values to accurately calibrate lower voltage ranges using a calibrated current range.

8.12.2.3 Current Source Gain

To calibrate current source gain, perform the following sequence of operations. Current settings do not require a zero offset calibration. Current source gain can only be calibrated using a voltage range that is fully calibrated.

1. Allow the instrument to warm up for 1 hour.
2. Select the highest current excitation (31.6 mA) and the highest resistance/highest voltage range available for that current (20 Ω/632 mV for the highest current).
3. Attach a near full-scale (20 Ω for the highest current) resistor of known value to the input of the instrument with short leads.
4. Use the CALG? query to read and record the gain coefficient for the selected current. (A safety step to revert to the original calibration if necessary.)
5. Set the CALG coefficient for the selected current to default (1).
6. Read the resistance from the instrument with the RDGR? query.
7. Calculate the gain coefficient value for the current by the following: CALG = Actual Resistance /RDGR. The gain coefficient should be +1 ±2%.
8. Send the gain coefficient to the instrument using the CALG command. Example for the highest current range: **CALG 1, 22, +1.01212E+0**
9. Send the CALSAVE command and wait 10 seconds for the calibration to be saved in non-volatile memory. (Alternately, this step can be done after all ranges are calibrated.)
10. This process is repeated for lower current settings. The voltage range must be reduced to calibrate currents below 1 μA in order to maintain the use of reasonable test resistance values. Paragraph 8.12.2.6 gives an example order of voltage and current calibrations that maintains reasonable resistance values.

8.12.2.4 Frequency Compensation

The Model 370 is normally operated and calibrated with the measurement frequency set to the default of 13.7 Hz. Two additional measurement frequencies are available. The analog filters in the Model 370 will attenuate slightly more or less of the measured signal at these frequencies so a compensation factor must be programmed into the instrument. Only one compensation factor is needed per frequency because the attenuation is related to frequency alone and does not depend on signal amplitude or measurement range.

To calculate the frequency compensation coefficients perform the following sequence of operations.

1. Configure the Model 370 on the 20 Ω resistance range with excitation of 632 mV (31.6 mA), frequency set to 13.7 Hz and a filter setting of 20 seconds. Allow the instrument to warm up for at least 1 hour.
2. Attach a nominal load of 20 Ω and allow the reading to stabilize (30 to 60 seconds).
3. Record the resistance reading.

4. Use CALG? 5,1 query to read and record the existing 9.8Hz frequency compensation coefficient. (A safety step to revert to the original calibration if necessary)
5. Set the 9.8 Hz frequency compensation coefficient to its default of 1 with the following command: **CALG 5,1,1**
6. Change frequency to 9.8 Hz (Paragraph 4.7.1) and allow the reading to stabilize (60 seconds).
7. Record the resistance reading.
8. Calculate the 9.8 Hz frequency compensation coefficient as: Coefficient (9.8 Hz) = Resistance (13.7 Hz)/Resistance (9.8 Hz). The coefficient should be 0.997 ± 2%
10. Send the 9.8 Hz coefficient to the instrument with the following command: **CALG 5,1, Coefficient (9.8 Hz)**
11. Use CALG? 5.3 query to read and record the existing 16.7Hz frequency compensation coefficient. (A safety step to revert to the original calibration if necessary)
12. Set the 16.2 Hz frequency compensation coefficient to its default of 1 with the following command: **CALG 5,3,1**
13. Change frequency to 16.2 Hz (Paragraph 4.7.1) and allow the reading to stabilize (60 seconds).
14. Record the resistance reading.
15. Calculate the 16.2 Hz frequency compensation coefficient as: Coefficient (16.2 Hz) = Resistance (13.7 Hz)/Resistance (16.2 Hz). The coefficient should be 1.005 ± 2%
16. Send the 16.2 Hz coefficient to the instrument with the following command: **CALG 5,3, Coefficient (16.2 Hz)**
17. Send the CALSAVE command and wait 10 seconds for the calibration to be saved in non-volatile memory. (Alternatively this step can be done after all ranges are calibrated.)

8.12.2.5 Scanner Compensation

The Model 370 will operate either with or without the Model 3716 Scanner. When a scanner is used, its pre-amplifier replaces the pre-amplifier on the Model 370. A compensation factor must be entered into the Model 370 so it can accurately subtract the gain of its pre-amplifier when a scanner is used. This calibration is separate from the gain calibration done to the scanner itself. When both the instrument and scanner are calibrated properly, the calibrations do not interact so scanners and instruments can be interchanged without loss of accuracy.

To calculate the scanner compensation coefficients perform the following sequence of operations.

1. Read and record the voltage gain coefficient for 632 mV range (Range 12) with the following command: **CALG? 2,12**
2. Read and record the voltage gain coefficient for the 6.32 mV range (Range 8) with the following command: **CALG? 2,8**
3. Use CALG? 6,1 query to read and record the existing scanner coefficient. (A safety step to revert to the original calibration if necessary)
4. Calculate the scanner compensation coefficient as: Scanner Coefficient = CALG(12)/CALG (8) × 100/101. The coefficient should be 1 ±0.3%.
5. Set the scanner compensation coefficient command: **CALG 6,1, Coefficient**
6. Send the CALSAVE command and wait 10 seconds for the calibration to be saved in non-volatile memory. (Alternatively this step can be done after all ranges are calibrated.)

8.12.2.6 Example Measurement Input Calibration Procedure

This calibration procedure was developed because traditional laboratory test equipment cannot accurately measure small, AC signals. The procedure relies on resistors of known value and the Model 370 being calibrated. The resistors are all between 2 Ω and 2 MΩ in value because it is difficult to purchase stable resistors outside of that range. Resistors with temperature stability of 25 ppm/°C are recommended. The exact resistor value is not important but the value must be known to 0.01% or better to achieve specified reading accuracy.

The following equipment is required to perform this calibration procedure:

- (Agilent) HP 3458A Digital Multimeter or equivalent.

- Short, 12" (30cm), Calibration Cable to connect voltage and current leads of the Model 370 to resistive loads or a short.
- Short, 12" (30cm), Calibration Cable to connect voltage and current leads of the Model 3716 Scanner to resistive loads.
- Test leads for the multimeter to connect across the instrument voltage leads.
- Resistive Loads of the following nominal values, known to 0.01% accuracy:

Nominal	Actual	Nominal	Actual
2 Ω		6 Ω	
20 Ω		60 Ω	
200 Ω		600 Ω	
2 kΩ		6 kΩ	
20 kΩ		60 kΩ	
200 kΩ		600 kΩ	
2 MΩ			

NOTE: Resistor values of 1,3 multiples can be substituted for the above recommended 2,6 multiples but more averaging may be required to achieve the same results. Four terminal connections are necessary for lower value resistors.

To calibrate both voltage and current perform the following sequence of operations. The resulting calibration accuracy from this procedure depends only on the accuracy of the calibration resistors being used and not the DMM. The order of operations was chosen to keep known resistance values between 2 Ω and 2 MΩ, make calibrations at the most stable operating point available for the current range or voltage setting and minimize the number of times a calibrated range is used to calibrate another range. Refer to the work sheet below for range dependant information.

1. Allow the Model 370 to warm up to 1 hour. Disconnect the scanner if present and attach a resistive load during warm up. Select the default frequency of 13.7 Hz.
2. Calibrate all voltage zero offsets: Follow the procedure described in 8.12.2.1. Be sure to set all voltage gain coefficients to default (1).
3. Calibrate the 632 mV voltage gain (only): Follow the procedure described in 8.12.2.2. (Small measurement errors in this step will not contribute to the final resistance measurement accuracy.)
4. Calibrate current gains from 31.6 mA through 1 µA: Remain on the 632 mV range that now has both voltage coefficients. Follow the procedure described in 8.12.2.3 and repeat down through the 1 µA setting.
5. Calibrate all remaining voltage gains from 200 mV to 2 µV: Remain on the 1 µA current setting which is now calibrated.
   - Attach a near full-scale resistor of known value to the input of the instrument.
   - Read and record the RDGR? resistance value.
   - Calculate the voltage gain coefficient: CALG = Actual Resistance/RDGR.
   - Send the coefficient to the instrument.
   - Repeat for all voltage ranges from 200 mV to 2 µV.
6. Calibrate current gains from 316 nA to 10 pA: Remain on the 200 kΩ resistance range. Follow procedure described in 8.12.2.3 except use the 200 kΩ resistance range instead of the "highest resistance range available".
7. Calibrate the last two current gains of 3.16 pA and 1 pA: Remain on 2 µV range and use 600 kΩ and 2 MΩ resistors for their respective ranges. Follow procedure described in Paragraph 8.12.2.3.
8. Calibrate frequency compensation as described in Paragraph 8.12.2.4.
9. Calibrate scanner compensation as described in Paragraph 8.12.2.5.
10. Send the CALSAVE command and wait 10 seconds for the calibration to be saved in non-volatile memory. (Alternatively this step can be done after all ranges are calibrated.)

Model 370 Resistance Input Calibration Work Sheet for Paragraph 8.12.2.6

Step	Range/Setting	Coefficient #	Resistor	Current	Filter	CALVIN?	Coefficient
2 a	632 mV Zero	CALZ 2,12	0	10 nA	10s		
2 b	200 mV Zero	CALZ 2,11	0	3.16 nA	10s		
2 c	63.2 mV Zero	CALZ 2,10	0	1 nA	10s		
2 d	20 mV Zero	CALZ 2,9	0	316 pA	10s		
2 e	6.32 mV Zero	CALZ 2,8	0	100 pA	10s		
2 f	2 mV Zero	CALZ 2,7	0	31.6 pA	10s		
2 g	632 µV Zero	CALZ 2,6	0	10 pA	10s		
2 h	200 µV Zero	CALZ 2,5	0	3.16 pA	10s		
2 i	63.2 µV Zero	CALZ 2,4	0	1 pA	50s		
2 j	20 µV Zero	CALZ 2,3	0	1 pA	50s		
2 k	6.32 µV Zero	CALZ 2,2	0	1 pA	100s		
2 l	2 µV Zero	CALZ 2,1	0	1 pA	200s		

Voltage Zero Offset Coefficient = CALVIN (Note: Lower ranges can be calculated rather than measured.)

Step	Range/Setting	Coefficient #	Resistor	Current	Filter	DVM	CALVIN?	Coefficient
3	632 mV Gain	CALG 2,12	20 Ω	31.6 mA	10s			

Voltage Gain Coefficient = Voltage DVM/CALVIN

Step	Range/Setting	Coefficient #	Resistor	Voltage	Filter	Actual	RDGR?	Coefficient
4 a	31.6 mA Gain	CALG 1,22	20 Ω	632 mV	10s			
4 b	10 mA Gain	CALG 1,21	60 Ω	632 mV	10s			
4 c	3.16 mA Gain	CALG 1,20	200 Ω	632 mV	10s			
4 d	1 mA Gain	CALG 1,19	600 Ω	632 mV	10s			
4 e	316 µA Gain	CALG 1,18	2 kΩ	632 mV	10s			
4 f	100 µA Gain	CALG 1,17	6 kΩ	632 mV	10s			
4 g	31.6 µA Gain	CALG 1,16	20 kΩ	632 mV	10s			
4 h	10 µA Gain	CALG 1,15	60 kΩ	632 mV	10s			
4 i	3.16 µA Gain	CALG 1,14	200 kΩ	632 mV	10s			
4 j	1 µA Gain	CALG 1,13	600 kΩ	632 mV	10s			

Current Gain Coefficient = Actual Resistance /RDGR

Step	Range/Setting	Coefficient #	Resistor	Current	Filter	Actual	RDGR?	Coefficient
5 a	200 mV Gain	CALG 2,11	200 kΩ	1 µA	10s			
5 b	63.2 mV Gain	CALG 2,10	60 kΩ	1 µA	10s			
5 c	20 mV Gain	CALG 2,9	20 kΩ	1 µA	10s			
5 d	6.32 mV Gain	CALG 2,8	6 kΩ	1 µA	10s			
5 e	2 mV Gain	CALG 2,7	2 kΩ	1 µA	10s			
5 f	632 µV Gain	CALG 2,6	600 Ω	1 µA	10s			
5 g	200 µV Gain	CALG 2,5	200 Ω	1 µA	10s			
5 h	63.2 µV Gain	CALG 2,4	60 Ω	1 µA	50s			
5 i	20 µV Gain	CALG 2,3	20 Ω	1 µA	50s			
5 j	6.32 µV Gain	CALG 2,2	6 Ω	1 µA	100s			
5 k	2 µV Gain	CALG 2,1	2 Ω	1 µA	200s			

Voltage Gain Coefficient = Actual Resistance/RDGR

Model 370 Resistance Input Calibration Work Sheet for Paragraph 8.12.2.6 (Continued)

Step	Range/Setting	Coefficient #	Resistor	Voltage	Filter	Actual	RDGR?	Coefficient
6 a	316 nA Gain	CALG 1,12	200 kΩ	63.2 mV	10s			
6 b	100 nA Gain	CALG 1,11	200 kΩ	20 mV	10s			
6 c	31.6 nA Gain	CALG 1,10	200 kΩ	6.32 mV	10s			
6 d	10 nA Gain	CALG 1,9	200 kΩ	2 mV	10s			
6 e	3.16 nA Gain	CALG 1,8	200 kΩ	632 µV	10s			
6 f	1 nA Gain	CALG 1,7	200 kΩ	200 µV	10s			
6 g	316 pA Gain	CALG 1,6	200 kΩ	63.2 µV	50s			
6 h	100 pA Gain	CALG 1,5	200 kΩ	20 µV	50s			
6 i	31.6 pA Gain	CALG 1,4	200 kΩ	6.32 µV	100s			
6 j	10 pA Gain	CALG 1,3	200 kΩ	2 µV	200s			

Current Gain Coefficient = Actual Resistance /RDGR

Step	Range/Setting	Coefficient #	Resistor	Voltage	Filter	Actual	RDGR?	Coefficient
7a	3.16 pA Gain	CALG 1,2	600 kΩ	2 µV	200s			
7b	1 pA Gain	CALG 1,1	2 MΩ	2 µV	200s			

Voltage Gain Coefficient = Actual Resistance/RDGR

8.12.3 Analog Voltage Output Calibration

The Model 370 has 2 analog voltage outputs with a range of ±10V. These outputs can be calibrated independently of each other and their calibration is independent of the measurement input. A DC voltmeter with accuracy of 1 mV on a 10 V range and cable to connect to the analog output are required. A zero offset and gain coefficient must be calculated for each output. The method used for calculating these coefficients provides the most accurate calibration of the DAC used in the instrument.

To calibrate the analog voltage outputs perform the following sequence of operations.

1. Configure the analog voltage output for manual operation (Paragraph 4.16). Set the manual output value to +100%. Attach the voltmeter and allow the instrument to warm up for 1 hour.
2. Set the zero offset and gain calibration coefficients to their defaults:

   Analog Output 1: **CALZ 4,1,0**
   CALG 4,1,1

   Analog Output 2: **CALZ 4,2,0**
   CALG 4,2,1

3. Measure and record the +100% output voltage.
4. Set the manual output value to –100%.
5. Measure and record the –100% voltage.
6. Calculate the gain coefficient as: Coefficient = 20 V/(Voltage (+100%) – Voltage (–100%)).
   The gain should be 0.995 ±1%.
7. Send the gain coefficient for the appropriate output to the instrument:

   Analog Output 1: **CALG 4,1,Coefficient**
   Analog Output 2: **CALG 4,2,Coefficient**

8. Set the manual output value to 0%.
9. Measure and record the output voltage.

Analog Voltage Output Calibration (Continued)

10. Calculate the zero offset coefficient in percent as:
    Coefficient = (–Voltage (0%)/10 V) × 100 = –Voltage (0%) × 10.
    The zero offset should be between ±1%.
11. Send the zero offset coefficient to the appropriate output.
    Analog Output 1: **CALZ 4,1,Coefficient**
    Analog Output 2: **CALZ 4,2,Coefficient**
12. Repeat from Step 3 for the second analog output.
13. Send the CALSAVE command.

8.12.4 Heater Output Calibration

The Model 370 has 8 heater output current ranges. The heater output is calibrated with individual zero offset and gain coefficients for each range. A DC voltmeter with accuracy of 1 mV on a 10 V range, resistors of known value from 20 Ω to 60 kΩ and cable to connect to the heater output are required. Please note that calibration accuracy does not affect closed loop control accuracy. Small errors in heater output accuracy are eliminated by the PID control equation. Calculation of heater output power does depend on this calibration but it also depends on the heater resistance that is entered into the instrument. Heater resistance is often difficult to measure because it changes with temperature and the heater is often installed with small gauge lead wire.

To calibrate the heater output ranges perform the following sequence of operations.

1. Configure the Model 370 for Open Loop control. Refer to Paragraph 4.11.2.1.
2. Set the heater output to the highest range of 100 mA.
3. Set the heater calibration coefficients to their defaults of 0 and 1 with the following commands: **CALZ 3,1,0** and **CALG 3,1,1**
4. Attach a nominal 20 Ω resistor of known value across the heater output.
5. Set the Manual Output parameter value to 0%.
6. With a DVM read and record the voltage across the resistor as Voltage (0%).
7. Calculate the heater range zero offset coefficient in percent as:
   Coefficient = (–Voltage (0%)/Actual Resistance)/(Nominal Current × 1.07) × 100.
   The zero offset should be 0 ±1.0%.
8. Send the zero offset coefficient to the instrument with the following command: **CALZ 3,1, Coefficient**
9. Change the Manual Output parameter value to 100%.
10. With a DVM read and record the voltage across the resistor as Voltage (100%).
11. Calculate the heater range gain coefficient as:
    Coefficient = Nominal Current/(Voltage (100%)/Actual Resistance).
    The gain should be 0.936 ±2%
12. End the gain coefficient to the instrument with the following command: **CALG 3,1, Coefficient**
13. End the CALSAVE command and wait 10 seconds for the calibration to be saved in non-volatile memory. (Alternatively this step can be done after all ranges are calibrated.)
14. Select the next lowest heater output range and repeat from Step 2 until all ranges are calibrated. Refer to the worksheet below for resistor values and command forms.

Model 370 Heater Output Calibration Worksheet for Paragraph 8.12.4

Step	Range/Setting	Coefficient #	Resistor	Actual	Voltage (0%)	Voltage (100%)	Coefficient
1	100 mA/Zero	CALZ 3,8	20 Ω				
1	100 mA/Gain	CALG 3,8	20 Ω				
2	31.6 mA/Zero	CALZ 3,7	60 Ω				
2	31.6 mA/Gain	CALG 3,7	60 Ω				
3	10 mA/Zero	CALZ 3,6	200 Ω				
3	10 mA/Gain	CALG 3,6	200 Ω				
4	3.16 mA/Zero	CALZ 3,5	600 Ω				
4	3.16 mA/Gain	CALG 3,5	600 Ω				
5	1 mA/Zero	CALZ 3,4	2 kΩ				
5	1 mA/Gain	CALG 3,4	2 kΩ				
6	316 µA/Zero	CALZ 3,3	6 kΩ				
6	316 µA/Gain	CALG 3,3	6 kΩ				
7	100 µA/Zero	CALZ 3,2	20 kΩ				
7	100 µA/Gain	CALG 3,2	20 kΩ				
8	31.6 µA/Zero	CALZ 3,1	60 kΩ				
8	31.6 µA/Gain	CALG 3,1	60 kΩ				

Heater Output Zero Offset Coefficient = (–Voltage (0%) / Actual Resistance) / (Nominal Current × 1.07) × 100
Heater Output Gain Coefficient = Nominal Current / (Voltage (100%) / Actual Resistance)

8.12.5 Calibration Commands

The following interface commands are only used during calibration and are in addition to those listed in Chapter 6.

CALG Gain Calibration Constant Command

Input: `CALG <input>, <range>, <value>[term]`

Format: n,nn, ±nnn.nnnE±nn

<input> Specifies the input or output to assign the gain calibration constant
1 = Current Excitation range
2 = Voltage Excitation range
3 = Heater range
4 = Analog Output
5 = Frequency
6 = Scanner

<range> Specifies the calibration range.
1 – 22 for Current Excitation range calibration. Reference RDGRNG
1 – 12 for Voltage Excitation range calibration. Reference RDGRNG.
1 – 8 for Heater range calibration. Reference HTRRNG.
1 – 2 for Analog Output calibration.
1 – 3 for Frequency compensation. Reference FREQ.
1 for Scanner gain compensation.

<value> Gain calibration constant value. Set value to 1 for default setting.

Remarks: Gain calibration constant is always a number near 1. Use CALSAVE to permanently save the gain calibration constants. Calibrated Reading = (Uncalibrated Reading – CALZ) × CALG.

Calibration Commands (Continued)

CALG?

Gain Calibration Constant Query

Input: `CALG? <input>, <range>[term]`

Format: n,nn

<input> Specifies input or output to query: 1-6.

<range> Dependent on <input>.

Returned: <value>[term]

Format: ±nnn.nnnE±nn (Refer to command for description)

CALSAVE

Calibration Save Command

Input: `CALSAVE[term]`

Remarks: Saves the serial number and all CALZ and CALG calibration constants to the EEPROM.

CALVIN?

Input Voltage Query

Input: `CALVIN?[term]`

Returned: <voltage>[term]

Format: ±nnn.nnnE±nn

Remarks: Value returned represents the most recent voltage at the input of the Model 370 for the active channel.

CALZ

Zero Offset Calibration Constant Command

Input: `CALZ <input>, <range>, <value>[term]`

Format: n,nn, ±nnn.nnnE±nn

<input> Specifies the input or output to assign the zero offset calibration constant
1 = Not Used (Reserved for Current Excitation)
2 = Voltage Excitation range
3 = Heater range
4 = Analog Output

<range> Specifies the calibration range.
1 – 12 for Voltage Excitation range calibration. Reference RDGRNG.
1 – 8 for Heater range calibration. Reference HTRRNG.
1 – 2 for Analog Output calibration.

<value> Zero offset calibration constant value. Set value to 0 for default setting.

Remarks: Zero offset calibration constant is always a number near zero in the same units as <input>.
Use CALSAVE to permanently save the zero offset calibration constants.
Calibrated Reading = (Uncalibrated Reading – CALZ) × CALG.

CALZ?

Zero Offset Calibration Constant Query

Input: `CALZ? <input>, <range>[term]`

Format: n,nn

<input> Specifies input or output to query: 1-4.

<range> Dependent on <input>.

Returned: <value>[term]

Format: ±nnn.nnnE±nn. (Refer to command for description)

8.13 MODELS 3716 and 3716/L SCANNER CALIBRATION

The Model 3716 and 3716/L scanners have one trim pot for gain calibration of the pre-amplifier contained in the scanner. The pre-amplifier is used for voltage ranges under 20 mV only. Higher voltage ranges do not require pre-amplification. Scanner calibration is independent of the Model 370 being used to calibrate with. The Model 370 has a separate calibration related to scanner operation described in Paragraph 8.12.2.5. When properly calibrated scanners and bridges can be interchanged without loss of measurement accuracy.

To calibrate the scanner perform the following sequence of operations:

1. Remove the calibration access cover on the front panel of the scanner.

NOTE: The scanner does not have to be disassembled for calibration.

2. Attach the scanner to a Model 370.
3. Attach a near 20 kΩ resistor of known value to the scanner input designated channel 1.
4. Configure the Model 370 to read Channel 1 continuously on the 20 kΩ range with 20 mV (1 μA) excitation and 5 second filter settling time.
5. Allow the instrument and scanner to warm up for 1 hour.
6. Read and record the resistance reading.
7. Change excitation to 6.32 mV (316 nA).
8. Adjust the trim pot behind the scanner front panel (through the access hole) until the resistance reading is the same as recorded in Step 6.
9. Replace the calibration access cover on the scanner front panel.

APPENDIX A

GLOSSARY OF TERMINOLOGY

absolute zero. The temperature of –273.16 °C, or –459.69 °F, or 0 K, thought to be the temperature at which molecular motion vanishes and a body would have no heat energy.[1]

accuracy. The degree of correctness with which a measured value agrees with the true value.[2]

electronic accuracy. The accuracy of an instrument independent of the sensor.

sensor accuracy. The accuracy of a temperature sensor and its associated calibration or its ability to match a standard curve.

American Standard Code for Information Exchange (ASCII). A standard code used in data transmission, in which 128 numerals, letters, symbols, and special control codes are represented by a 7-bit binary number as follows:

Bits b_7 b_6 b_5					000	001	010	011	100	101	110	111
b_4	b_3	b_2	b_1	Col. / Row	0	1	2	3	4	5	6	7
0	0	0	0	0	NUL	DLE	SP	0	'	P	@	p
0	0	0	1	1	SOH	DC1	!	1	A	Q	a	q
0	0	1	0	2	STX	DC2	"	2	B	R	b	r
0	0	1	1	3	ETX	DC3	#	3	C	S	c	s
0	1	0	0	4	EOT	DC4	$	4	D	T	d	t
0	1	0	1	5	ENG	NAK	%	5	E	U	e	u
0	1	1	0	6	ACK	SYN	&	6	F	V	f	v
0	1	1	1	7	BEL	ETB	'	7	G	W	g	w
1	0	0	0	8	BS	CAN	(	8	H	X	h	x
1	0	0	1	9	HT	EM	)	9	I	Y	i	y
1	0	1	0	10	LF	SS	*	:	J	Z	j	z
1	0	1	1	11	VT	ESC	+	;	K	[	k	{
1	1	0	0	12	FF	FS	,	<	L	~	l	|
1	1	0	1	13	CR	GS	—	=	M	]	m	}
1	1	1	0	14	SO	RS	.	>	N	^	n	|
1	1	1	1	15	SI	US	/	?	O	_	o	DEL

American Wire Gage (AWG). Wiring sizes are defined as diameters in inches and millimeters as follows:

AWG	Dia. In.	Dia. mm	AWG	Dia. In.	Dia. mm	AWG	Dia. In.	Dia. mm	AWG	Dia. In.	Dia. mm
1	0.2893	7.348	11	0.0907	2.304	21	0.0285	0.7230	31	0.0089	0.2268
2	0.2576	6.544	12	0.0808	2.053	22	0.0253	0.6438	32	0.0080	0.2019
3	0.2294	5.827	13	0.0720	1.829	23	0.0226	0.5733	33	0.00708	0.178
4	0.2043	5.189	14	0.0641	1.628	24	0.0207	0.5106	34	0.00630	0.152
5	0.1819	4.621	15	0.0571	1.450	25	0.0179	0.4547	35	0.00561	0.138
6	0.1620	4.115	16	0.0508	1.291	26	0.0159	0.4049	36	0.00500	0.127
7	0.1443	3.665	17	0.0453	1.150	27	0.0142	0.3606	37	0.00445	0.1131
8	0.1285	3.264	18	0.0403	1.024	28	0.0126	0.3211	38	0.00397	0.1007
9	0.1144	2.906	19	0.0359	0.9116	29	0.0113	0.2859	39	0.00353	0.08969
10	0.1019	2.588	20	0.0338	0.8118	30	0.0100	0.2546	40	0.00314	0.07987

ambient temperature. The temperature of the surrounding medium, such as gas or liquid, which comes into contact with the apparatus.[1]

ampere. The constant current that, if maintained in two straight parallel conductors of infinite length, of negligible circular cross section, and placed one meter apart in a vacuum, would produce between these conductors a force equal to 2×10^{-7} newton per meter of length.[2] This is one of the base units of the SI.

ampere-turn. A MKS unit of magnetomotive force equal to the magnetomotive force around a path linking one turn of a conducting loop carrying a current of one ampere; or 1.26 gilberts.

ampere/meter (A/m). The SI unit for magnetic field strength (H). 1 ampere/meter = $4\pi/1000$ oersted ≈0.01257 oersted.

analog controller. A feedback control system where there is an unbroken path of analog processing between the feedback device (sensor) and control actuator (heater).

analog data. Data represented in a continuous form, as contrasted with digital data having discrete values.[1]

analog output. A voltage output from an instrument that is proportional to its input. For example, from a digital voltmeter, the output voltage is generated by a digital-to-analog converter so it has a discrete number of voltage levels.

asphyxiant gas. A gas which has little or no positive toxic effect but which can bring about unconsciousness and death by displacing air and thus depriving an organism of oxygen.

autotuning. In Lake Shore instruments, the Autotuning algorithm automatically determines the proper settings for Gain (Proportional), Reset (Integral), and Rate (Derivative) by observing the time response of the system upon changes in setpoint.

B. Symbol for magnetic flux density. *See* Magnetic Flux Density.

bar. Unit of pressure equal to 10^5 pascal, or 0.98697 standard atmosphere.

Baud. A unit of signaling speed equal to the number of discrete conditions or signal events per second, or the reciprocal of the time of the shortest signal element in a character.[2]

bel (B). A dimensionless unit expressing the ration of two powers or intensities, or the ratio of a power to a reference power, such that the number of bels is the common logarithm of this ratio.[1]

bifilar windings. A winding consisting of two insulated wires, side by side, with currents traveling through them in opposite directions.[1]

bit. A contraction of the term "binary digit"; a unit of information represented by either a zero or a one.[2]

BNC. Bayonet Nut Connector.

boiling point. The temperature at which a substance in the liquid phase transforms to the gaseous phase; commonly refers to the boiling point at sea level and standard atmospheric pressure.

CalCurve™ Service. The service of storing a mathematical representation of a calibration curve on an EEPROM or installed in a Lake Shore instrument. Previously called Precision Option.

calibrate. To determine, by measurement or comparison with a standard, the correct value of each scale reading on a meter or other device, or the correct value for each setting of a control knob.[1]

Carbon-Glass™. A temperature sensing material fabricated from a carbon-impregnated glass matrix used to make the Lake Shore CGR family of sensors.

Celsius (°C) Scale. A temperature scale that registers the freezing point of water as 0 °C and the boiling point as 100 °C under normal atmospheric pressure. Celsius degrees are purely derived units, calculated from the Kelvin Thermodynamic Scale. Formerly known as "centigrade." *See* Temperature for conversions.

Cernox™. A Lake Shore resistance temperature detector based on a ceramic-oxy-nitride resistance material.

CGR. Carbon Glass Resistor.

cgs system of units. A system in which the basic units are the centimeter, gram, and second.[2]

Chebychev polynomials. A family of orthogonal polynomials which solve Chebychev's differential equation.[1]

Chebychev differential equation. A special case of Gauss' hypergeometric second-order differential equation: $(1 - x^2)\, f''(x) - xf'(x) + n^2 f(x) = 0$.[1]

closed-loop. *See* feedback control system.

coercive force (coercive field). The magnetic field strength (H) required to reduce the magnetic induction (B) in a magnetic material to zero.

coercivity. generally used to designate the magnetic field strength (H) required to reduce the magnetic induction (B) in a magnetic material to zero from saturation. The coercivity would be the upper limit to the coercive force.

common-mode rejection (CMR). The ability of an amplifier to cancel a common-mode signal while responding to an out-of-phase signal.[1]

cryogen. *See* cryogenic fluid.[1]

cryogenic. Refers to the field of low temperatures, usually –130 °F or below, as defined by 173.300(f) of Title 49 of the Code of Federal Regulations.

cryogenic fluid. A liquid that boils at temperatures of less than about 110 K at atmospheric pressure, such as hydrogen, helium, nitrogen, oxygen, air, or methane. Also known as cryogen.[1]

cryostat. An apparatus used to provide low-temperature environments in which operations may be carried out under controlled conditions.[1]

cryotronics. The branch of electronics that deals with the design, construction, and use of cryogenic devices.[1]

Curie temperature (Tc). Temperature at which a magnetized sample is completely demagnetized due to thermal agitation. Named for Pierre Curie (1859 – 1906), a French chemist.

current source. A type of power supply that supplies a constant current through a variable load resistance by automatically varying its compliance voltage. A single specification given as "compliance voltage" means the output current is within specification when the compliance voltage is between zero and the specified voltage.

curve. A set of data that defines the temperature response of a temperature sensor. It is used to convert the signal from the sensor to temperature.

decibels (dB). A unit for describing the ratio of two powers or intensities, or the ratio of a power to a reference power; equal to one-tenth bel; if P_1 and P_2 are two amounts of power, the first is said to be *n* decibels greater, where $n = 10 \log_{10} (P_1/P_2)$.[1]

degree. An incremental value in the temperature scale, i.e., there are 100 degrees between the ice point and the boiling point of water in the Celsius scale and 180 degrees between the same two points in the Fahrenheit scale.

demagnetization. when a sample is exposed to an applied field (H_a), poles are induced on the surface of the sample. Some of the returned flux from these poles is inside of the sample. This returned flux tends to decrease the net magnetic field strength internal to the sample yielding a true internal field (H_{int}) given by: $H_{int} = H_a - DM$,where M is the volume magnetization and D is the demagnetization factor. D is dependent on the sample geometry and orientation with respect to the field.

deviation. The difference between the actual value of a controlled variable and the desired value corresponding to the setpoint.[1]

Dewar flask. A vessel having double walls, the space between being evacuated to prevent the transfer of heat and the surfaces facing the vacuum being heat-reflective; used to hold liquid gases and to study low-temperature phenomena.[1] Invented by Sir James Dewar (1842 – 1923), a Scottish physical chemist.

differential permeability. The slope of a B versus H curve: μ_d = dB/dH.

differential susceptibility. The slope of a M versus H curve: χ_d = dM/dH.

digital controller. A feedback control system where the feedback device (sensor) and control actuator (heater) are joined by a digital processor. In Lake Shore controllers the heater output is maintained as a variable DC current source.

digital data. Pertaining to data in the form of digits or interval quantities. Contrast with analog data.[2]

dimensionless sensitivity. Sensitivity of a physical quantity to a stimulus, expressed in dimensionless terms. The dimensionless temperature sensitivity of a resistance temperature sensor is expressed as $S_d = (T/R)(dR/dT)$ which is also equal to the slope of R versus T on a log-log plot, that is $S_d = d \ln R / d \ln T$. Note that the absolute temperature (in Kelvin) must be used in these expressions.

drift, instrument. An undesired but relatively slow change in output over a period of time, with a fixed reference input. *Note:* Drift is usually expressed in percent of the maximum rated value of the variable being measured.[2]

dynamic data exchange (DDE). A method of interprocess communication which passes data between processes and synchronized events. DDE uses shared memory to exchange data between applications and a protocol to synchronize the passing of data.

dynamic link library (DLL). A module that contains code, data, and Windows resources that multiple Windows programs can access.

electromagnet. A device in which a magnetic field is generated as the result of electrical current passing through a helical conducting coil. It can be configured as an iron-free solenoid in which the field is produced along the axis of the coil, or an iron-cored structure in which the field is produced in an air gap between pole faces. The coil can be water cooled copper or aluminum, or superconductive.

electrostatic discharge (ESD). A transfer of electrostatic charge between bodies at different electrostatic potentials caused by direct contact or induced by an electrostatic field.

error. Any discrepancy between a computed, observed, or measured quantity and the true, specified, or theoretically correct value or condition.[2]

excitation. Either an AC or DC input to a sensor used to produce an output signal. Common excitations include: constant current, constant voltage, or constant power.

Fahrenheit (°F) Scale. A temperature scale that registers the freezing point of water as 32 °F and the boiling point as 212 °F under normal atmospheric pressure. *See* Temperature for conversions.

feedback control system. A system in which the value of some output quantity is controlled by feeding back the value of the controlled quantity and using it to manipulate an input quantity so as to bring the value of the controlled quantity closer to a desired value. Also known as closed-loop control system.[1]

four-lead. measurement technique where one pair of excitation leads and an independent pair of measurement leads are used to measure a sensor. This method reduces the effect of lead resistance on the measurement.

gamma. A cgs unit of low-level flux density, where 100,000 gamma equals one oersted, or 1 gamma equals 10^{-5} oersted.

gauss (G). The cgs unit for magnetic flux density (B). 1 gauss = 10^{-4} tesla. Named for Karl Fredrich Gauss (1777 – 1855) a German mathematician, astronomer, and physicist.

gaussian system (units). A system in which centimeter-gram-second units are used for electric and magnetic qualities.

general purpose interface bus (GPIB). Another term for the IEEE-488 bus.

germanium (Ge). A common temperature sensing material fabricated from doped germanium to make the Lake Shore GR family of resistance temperature sensor elements.

gilbert (Gb). A cgs electromagnetic unit of the magnetomotive force required to produce one maxwell of magnetic flux in a magnetic circuit of unit reluctance. One gilbert is equal to $10/4\pi$ ampere-turn. Named for William Gilbert (1540 – 1603), an English physicist; hypothesized that the Earth is a magnet.

gilbert per centimeter. Practical cgs unit of magnet intensity. Gilberts per cm are the same as oersteds.

Greek alphabet. The Greek alphabet is defined as follows:

Alpha	α	A	Iota	ι	I	Rho	ρ	P
Beta	β	B	Kappa	κ	K	Sigma	σ	Σ
Gamma	γ	Γ	Lambda	λ	Λ	Tau	τ	T
Delta	δ	Δ	Mu	μ	M	Upsilon	υ	Y
Epsilon	ε	E	Nu	ν	N	Phi	ϕ	Φ
Zeta	ζ	Z	Xi	ξ	Ξ	Chi	χ	X
Eta	η	H	Omicron	o	O	Psi	ψ	Ψ
Theta	θ	Θ	Pi	π	Π	Omega	ω	Ω

ground. A conducting connection, whether intentional or accidental, by which an electric circuit or equipment is connected to the Earth, or to some conducting body of relatively large extent that serves in place of the Earth.
Note: It is used for establishing and maintaining the potential of the Earth (or of the conducting body) or approximately that potential, on conductors connected to it, and for conducting ground current to and from the Earth (or of the conducting body).[2]

H. Symbol for magnetic field strength. *See* Magnetic Field Strength.

Hall effect. The generation of an electric potential perpendicular to both an electric current flowing along a thin conducting material and an external magnetic field applied at right angles to the current. Named for Edwin H. Hall (1855–1938), an American physicist.

hazard communication standard (HCS). The OSHA standard cited in 29 CFR 1910.1200 requiring communication of risks from hazardous substances to workers in regulated facilities.

hertz (Hz). A unit of frequency equal to one cycle per second.

hysteresis. The dependence of the state of a system on its previous history, generally in the form of a lagging of a physical effect behind its cause.[1] Also *see* magnetic hysteresis.

I.D. Inner diameter.

IEC. International Electrotechnical Commission.

IEEE. Institute of Electrical and Electronics Engineers.

IEEE-488. An instrumentation bus with hardware and programming standards designed to simplify instrument interfacing. The addressable, parallel bus specification is defined by the IEEE.

initial permeability. The permeability determined at H = 0 and B = 0.

initial susceptibility. The susceptibility determined at H = 0 and M = 0.

infrared (IR). For practical purposes any radiant energy within the wavelength range 770 to 10^6 nanometers is considered infrared energy.[2] The full range is usually divided into three sub-ranges: near IR, far IR, and sub-millimeter.

input card. Electronics on a printed circuit board (card) that plug into an instrument main frame. Used by configurable instruments to allow for different sensor types or interface options.

interchangeability. Ability to exchange one sensor or device with another of the same type without a significant change in output or response.

international system of units (SI). A universal coherent system of units in which the following seven units are considered basic: meter, kilogram, second, ampere, Kelvin, mole, and candela. The International System of Units, or Système International d'Unités (SI), was promulgated in 1960 by the Eleventh General Conference on Weights and Measures. For definition, spelling, and protocols, *see* Reference 3 for a short, convenient guide.

interpolation table. A table listing the output and sensitivity of a sensor at regular or defined points which may be different from the points at which calibration data was taken.

intrinsic coercivity. The magnetic field strength (H) required to reduce the magnetization (M) or intrinsic induction in a magnetic material to zero.

intrinsic induction. The contribution of the magnetic material (B_i) to the total magnetic induction (B).

$B_i = B - \mu_0 H$ (SI) $B_i = B - H$ (cgs)

IPTS-68. International Practical Temperature Scale of 1968. Also abbreviated as T_{68}.

isolated (neutral system). A system that has no intentional connection to ground except through indicating, measuring, or protective devices of very-high impedance.[2]

ITS-90. International Temperature Scale of 1990. Also abbreviated as T_{90}. This scale was designed to bring into as close a coincidence with thermodynamic temperatures as the best estimates in 1989 allowed.

Kelvin (K). The unit of temperature on the Kelvin Scale. It is one of the base units of SI. The word "degree" and its symbol (°) are omitted from this unit. *See* Temperature Scale for conversions.

Kelvin Scale. The Kelvin Thermodynamic Temperature Scale is the basis for all international scales, including the ITS-90. It is fixed at two points: the absolute zero of temperature (0 K), and the triple point of water (273.16 K), the equilibrium temperature that pure water reaches in the presence of ice and its own vapor.

line regulation. The maximum steady-state amount that the output voltage or current changes as result of a specified change in input line voltage (usually for a step change between 105–125 or 210–250 volts, unless otherwise specified).

line voltage. The RMS voltage of the primary power source to an instrument.

liquid helium (LHe). Used for low temperature and superconductivity research: minimum purity 99.998%. Boiling point at 1 atm = 4.2 K. Latent heat of vaporization = 2.6 kilojoules per liter. Liquid density = 0.125 kilograms per liter.

EPA Hazard Categories: Immediate (Acute) Health and Sudden Release of Pressure Hazards
DOT Name: Helium, Refrigerated Liquid
DOT Label: Nonflammable Gas
DOT Class: Nonflammable Gas
DOT ID No.: UN 1963

liquid nitrogen (LN_2). Also used for low temperature and superconductivity research and for its refrigeration properties such as in freezing tissue cultures: minimum purity 99.998%, O_2 8 ppm max. Boiling point at 1 atm = 77.4 K. Latent heat of vaporization = 160 kilojoules per liter. Liquid density = 0.81 kilograms per liter.

EPA Hazard Categories: Immediate (Acute) Health and Sudden Release of Pressure Hazards
DOT Name: Nitrogen, Refrigerated Liquid
DOT Label: Nonflammable Gas
DOT Class: Nonflammable Gas
DOT ID No.: UN 1977

load regulation. A steady-state decrease of the value of the specified variable resulting from a specified increase in load, generally from no-load to full-load unless otherwise specified.

lock-in amplifier. An amplifier that uses some form of automatic synchronization with an external reference signal to detect and measure very weak electromagnetic radiation at radio or optical wavelengths in the presence of very high noise levels.[1]

M. Symbol for magnetization. *See* magnetization.

magnetic air gap. The air space, or non-magnetic portion, of a magnetic circuit.

magnetic field strength (H). The magnetizing force generated by currents and magnetic poles. For most applications, the magnetic field strength can be thought of as the applied field generated, for example, by a superconducting magnet. The magnetic field strength is not a property of materials. Measure in SI units of A/m or cgs units of oersted.

magnetic flux density (B). Also referred to as magnetic induction. This is the net magnetic response of a medium to an applied field, H. The relationship is given by the following equation: $B = \mu_0(H + M)$ for SI, and $B = H + 4\pi M$ for cgs, where H = magnetic field strength, M = magnetization, and μ_0 = permeability of free space = $4\pi \times 10^{-7}$ H/m.

magnetic hysteresis. The property of a magnetic material where the magnetic induction (B) for a given magnetic field strength (H) depends upon the past history of the samples magnetization.

magnetic induction (B). *See* magnetic flux density.

magnetic moment (m). This is the fundamental magnetic property measured with dc magnetic measurements systems such as a vibrating sample magnetometer, extraction magnetometer, SQUID magnetometer, etc. The exact technical definition relates to the torque exerted on a magnetized sample when placed in a magnetic field. Note that the moment is a total attribute of a sample and alone does not necessarily supply sufficient information in understanding material properties. A small highly magnetic sample can have exactly the same moment as a larger weakly magnetic sample (*see* Magnetization). Measured in SI units as $A \cdot m^2$ and in cgs units as emu. 1 emu = 10^{-3} $A \cdot m^2$.

magnetic units. Units used in measuring magnetic quantities. Includes ampere-turn, gauss, gilbert, line of force, maxwell, oersted, and unit magnetic pole.

magnetization (M). This is a material specific property defined as the magnetic moment (m) per unit volume (V). M = m/V. Measured in SI units as A/m and in cgs units as emu/cm^3. 1 emu/cm^3 = 10^3 A/m. Since the mass of a sample is generally much easier to determine than the volume, magnetization is often alternately expressed as a mass magnetization defined as the moment per unit mass.

material safety data sheet (MSDS). OSHA Form 20 contains descriptive information on hazardous chemicals under the OSHA Hazard Communication Standard (HCS). These data sheets also provide precautionary information on the safe handling of the gas as well as emergency and first aid procedures.

microcontroller. A microcomputer, microprocessor, or other equipment used for precise process control in data handling, communication, and manufacturing.[1]

MKSA System of Units. A system in which the basic units are the meter, kilogram, and second, and the ampere is a derived unit defined by assigning the magnitude $4\pi \times 10^{-7}$ to the rationalized magnetic constant (sometimes called the permeability of space).

NBS. National Bureau of Standards. Now referred to as NIST.

negative temperature coefficient (NTC). Refers to the sign of the temperature sensitivity. For example, the resistance of a NTC sensor decreases with increasing temperature.

National Institute of Standards and Technology (NIST). Government agency located in Gaithersburg, Maryland and Boulder, Colorado, that defines measurement standards in the United States.

noise (electrical). Unwanted electrical signals that produce undesirable effects in circuits of control systems in which they occur.[2]

normalized sensitivity. For resistors, signal sensitivity (dR/dT) is geometry dependent; i.e., dR/dT scales directly with R; consequently, very often this sensitivity is normalized by dividing by the measured resistance to give a sensitivity, s_T, in percent change per Kelvin. s_T = (100/R) (dR/dT) %K, where T is the temp. in Kelvin and R is the resistance in ohms.

normally closed (N.C.). A term used for switches and relay contacts. Provides a closed circuit when actuator is in the free (unenergized) position.

normally open (N.O.). A term used for switches and relay contacts. Provides an open circuit when actuator is in the free (unenergized) position.

O.D. Outer diameter.

oersted (Oe). The cgs unit for the magnetic field strength (H). 1 oersted = $10^3/4\pi$ ampere/meter ≈79.58 ampere/meter.

ohm (Ω). The SI unit of resistance (and of impedance). The ohm is the resistance of a conductor such that a constant current of one ampere in it produces a voltage of one volt between its ends.[2]

open-loop. A control system in which the system outputs are controlled by system inputs only, and no account is taken of actual system output.[1]

pascal (Pa). The SI unit of pressure equal to 1 N/m^2. Equal to 1.45×10^{-4} psi, 1.0197×10^{-5} kg_f/cm^2, 7.5×10^{-3} torr, 4.191×10^{-3} inches of water, or 1×10^{-5} bar.

permeability. Material parameter which is the ratio of the magnetic induction (B) to the magnetic field strength (H): $\mu = B/H$. Also *see* Initial Permeability and Differential Permeability.

platinum (Pt). A common temperature sensing material fabricated from pure platinum to make the Lake Shore PT family of resistance temperature sensor elements.

polynomial fit. A mathematical equation used to fit calibration data. Polynomials are constructed of finite sums of terms of the form $a_i x_i$, where a_i is the ith fit coefficient and x_i is some function of the dependent variable.

positive temperature coefficient (PTC). Refers to the sign of the temperature sensitivity. For example, the resistance of a PTC sensor increases with increasing temperature.

pounds per square inch (psi). A unit of pressure. 1 psi = 6.89473 kPa. Variations include psi absolute (psia) measured relative to vacuum (zero pressure) where one atmosphere pressure equals 14.696 psia and psi gauge (psig) where gauge measured relative to atmospheric or some other reference pressure.

ppm. Parts per million, e.g., 4×10^{-6} is four parts per million.

precision. Careful measurement under controlled conditions which can be repeated with similar results. *See* repeatability. Also means that small differences can be detected and measured with confidence. *See* resolution.

prefixes. SI prefixes used throughout this manual are as follows:

Factor	Prefix	Symbol	Factor	Prefix	Symbol
10^{24}	yotta	Y	10^{-1}	deci	d
10^{21}	zetta	Z	10^{-2}	centi	c
10^{18}	exa	E	10^{-3}	milli	m
10^{15}	peta	P	10^{-6}	micro	µ
10^{12}	tera	T	10^{-9}	nano	n
10^{9}	giga	G	10^{-12}	pico	p
10^{6}	mega	M	10^{-15}	femto	f
10^{3}	kilo	k	10^{-18}	atto	a
10^{2}	hecto	h	10^{-21}	zepto	z
10^{1}	deka	da	10^{-24}	yocto	y

probe. A long, thin body containing a sensing element which can be inserted into a system in order to make measurements. Typically, the measurement is localized to the region near the tip of the probe.

proportional, integral, derivative (PID). A control function where output is related to the error signal in three ways. Proportional (gain) acts on the instantaneous error as a multiplier. Integral (reset) acts on the area of error with respect to time and can eliminate control offset or droop. Derivative (rate) acts on the rate of change in error to dampen the system, reducing overshoot.

quench. A condition where the superconducting magnet goes "normal," i.e., becomes non-superconductive. When this happens, the magnet becomes resistive, heat is generated, liquid cryogen is boiled off, and the magnet power supply is shut down due to the sudden increase in current demand.

rack mount. An instrument is rack mountable when it has permanent or detachable brackets that allow it to be securely mounted in an instrument rack. The standard rack-mount is 19 inches wide. A full-rack instrument requires the entire width of the rack. Two half-rack instruments fit horizontally in one rack width.

relief valve. A type of pressure relief device which is designed to relieve excessive pressure, and to reclose and reseal to prevent further flow of gas from the cylinder after reseating pressure has been achieved.

remanence. The remaining magnetic induction in a magnetic material when the material is first saturated and then the applied field is reduced to zero. The remanence would be the upper limit to values for the remanent induction. Note that no strict convention exists for the use of remanent induction and remanence and in some contexts the two terms may be used interchangeably.

remanent induction. The remaining magnetic induction in a magnetic material after an applied field is reduced to zero. Also *see* remanence.

repeatability. The closeness of agreement among repeated measurements of the same variable under the same conditions.[2]

resistance temperature detector (RTD). Resistive sensors whose electrical resistance is a known function of the temperature, made of, e.g., carbon-glass, germanium, platinum, or rhodium-iron.

resolution. The degree to which nearly equal values of a quantity can be discriminated.[2]

display resolution. The resolution of the physical display of an instrument. This is not always the same as the measurement resolution of the instrument. Decimal display resolution specified as "*n* digits" has 10^n possible display values. A resolution of *n* and one-half digits has 2×10^n possible values.

measurement resolution. The ability of an instrument to resolve a measured quantity. For digital instrumentation this is often defined by the analog to digital converter being used. A n-bit converter can resolve one part in 2^n. The smallest signal change that can be measured is the full scale input divided by 2^n for any given range. Resolution should not be confused with accuracy.

RhFe. Rhodium-iron. Rhodium alloyed with less than one atomic percent iron is used to make the Lake Shore RF family of sensors. Rhodium-iron is a spin fluctuation alloy which has a significant temperature coefficient of resistance below 20 K where most metals rapidly lose sensitivity.

Roman numerals. Letters employed in the ancient Roman system of numeration as follows:

I	1	VI	6	L	50
II	2	VII	7	C	100
III	3	VIII	8	D	500
IV	4	IX	9	M	1000
V	5	X	10		

root mean square (RMS). The square root of the time average of the square of a quantity; for a periodic quantity the average is taken over one complete cycle. Also known as effective value.[1]

RS-232C. Bi-directional computer serial interface standard defined by the Electronic Industries Association (EIA). The interface is single-ended and non-addressable.

Seebeck effect. The development of a voltage due to differences in temperature between two junctions of dissimilar metals in the same circuit.[1]

self-heating. Heating of a device due to dissipation of power resulting from the excitation applied to the device. The output signal from a sensor increases with excitation level, but so does the self-heating and the associated temperature measurement error.

sensitivity. The ratio of the response or change induced in the output to a stimulus or change in the input. Temperature sensitivity of a resistance temperature detector is expressed as S = dR/dT.

setpoint. The value selected to be maintained by an automatic controller.[1]

serial interface. A computer interface where information is transferred one bit at a time rather than one byte (character) at a time as in a parallel interface. RS-232C is the most common serial interface.

SI. Système International d'Unités. *See* International System of Units.

stability. The ability of an instrument or sensor to maintain a constant output given a constant input.

still. A device used to evaporate liquids; heat is applied to the liquid, and the resulting vapor is condensed to a liquid state.[1]

strain relief. A predetermined amount of slack to relieve tension in component or lead wires. Also called stress relief.

superconducting magnet. An electromagnet whose coils are made of a type II superconductor with a high transition temperature and extremely high critical field, such as niobium-tin, Nb_3Sn; it is capable of generating magnetic fields of 100,000 oersteds and more with no steady power dissipation.[1] *See* electromagnet.

susceptance. In electrical terms, susceptance is defined as the reciprocal of reactance and the imaginary part of the complex representation of admittance: [suscept(ibility) + (conduct)ance].

susceptibility (χ). Parameter giving an indication of the response of a material to an applied magnetic field. The susceptibility is the ratio of the magnetization (M) to the applied field (H). $\chi = M/H$. In both SI units and cgs units the volume susceptibility is a dimensionless parameter. Multiply the cgs susceptibility by 4π to yield the SI susceptibility. *See* also Initial Susceptibility and Differential Susceptibility. As in the case of magnetization, the susceptibility is often seen expressed as a mass susceptibility or a molar susceptibility depending upon how M is expressed.

temperature scales. *See* Kelvin Scale, Celsius Scale, and ITS-90. Proper metric usage requires that only Kelvin and degrees Celsius be used. However, since degrees Fahrenheit is in such common use, all three scales are delineated as follows:

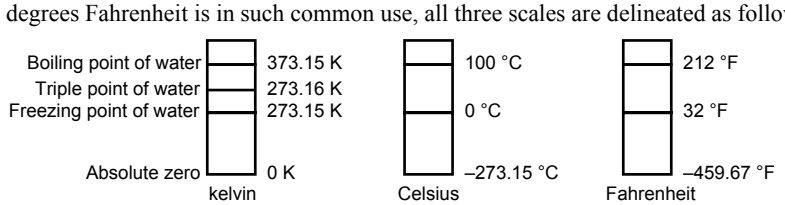

To convert Kelvin to Celsius, subtract 273.15.

To convert Celsius to Fahrenheit: multiply °C by 1.8 then add 32, or: °F = (1.8 × °C) + 32.

To convert Fahrenheit to Celsius: subtract 32 from °F then divide by 1.8, or: °C = (°F – 32)/1.8.

temperature coefficient, measurement. The measurement accuracy of an instrument is affected by changes in ambient temperature. The error is specified as an amount of change (usually in percent) for every one degree change in ambient temperature.

tesla (T). The SI unit for magnetic flux density (B). 1 tesla = 10^4 gauss

thermal emf. An electromotive force arising from a difference in temperature at two points along a circuit, as in the Seebeck effect.[1]

tolerance. The range between allowable maximum and minimum values.

torr. Unit of pressure. 1 torr ≈ 1 mm of mercury. 1 atmosphere = 760 torr.

transistor-transistor logic (TTL). A logic circuit containing two transistors, for driving large output capacitances at high speed.[1]

two-lead. Measurement technique where one pair of leads is used for both excitation and measurement of a sensor. This method will not reduce the effect of lead resistance on the measurement.

Underwriters Laboratories (UL). An independent laboratory that establishes standards for commercial and industrial products.

unit magnetic pole. A pole with a strength such that when it is placed 1 cm away from a like pole, the force between the two is 1 dyne.

volt (V). The difference of electric potential between two points of a conductor carrying a constant current of one ampere, when the power dissipated between these points is equal to one watt.[2]

volt-ampere (VA). The SI unit of apparent power. The volt-ampere is the apparent power at the points of entry of a single-phase, two-wire system when the product of the RMS value in amperes of the current by the RMS value in volts of the voltage is equal to one.[2]

watt (W). The SI unit of power. The watt is the power required to do work at the rate of 1 joule per second.[2]

References:

1 Sybil P. Parker, Editor. *McGraw-Hill Dictionary of Scientific and Technical Terms: Fifth Edition*. New York: McGraw Hill, 1994 (IBSN 0-07-113584-7)

2 Christopher J. Booth, Editor. *The New IEEE Standard Dictionary of Electrical and Electronic Terms: IEEE Std 100-1992, Fifth Edition.* New York: Institute of Electrical and Electronics Engineers, 1993 (IBSN 1-55937-240-0)

3 Nelson, Robert A. *Guide For Metric Practice,* Page BG7 - 8, Physics Today, Eleventh Annual Buyer's Guide, August 1994 (ISSN 0031-9228 coden PHTOAD)

APPENDIX B

TEMPERATURE SCALES

B1.0 DEFINITION

Temperature is a fundamental unit of measurement which describes the kinetic and potential energies of the atoms and molecules of bodies. When the energies and velocities of the molecules in a body are increased, the temperature is increased whether the body is a solid, liquid, or gas. Thermometers are used to measure temperature. The temperature scale is based on the temperature at which ice, liquid water, and water vapor are all in equilibrium. This temperature is called the triple point of water and is assigned the value 0 °C, 32 °F, and 273.15 K. These three temperature scales are defined as follows:

Celsius. Abbreviation: °C. A temperature scale that registers the freezing point of water as 0 °C and the boiling point as 100 °C under normal atmospheric pressure. Formerly known as "Centigrade." Originally devised by Anders Celsius (1701–1744), a Swedish astronomer.

Fahrenheit. Abbreviation: °F. A temperature scale that registers the freezing point of water as 32 °F and the boiling point as 212 °F under normal atmospheric pressure. Originally devised by Gabriel Fahrenheit (1686–1736), a German physicist residing in Holland; developed use of mercury in thermometry.

Kelvin. Abbreviation: K. An absolute scale of temperature, the zero point of which is approximately –273.15°C. Scale units are equal in magnitude to Celsius degrees. Originally devised by Lord Kelvin, William Thompson, (1824–1907), a British physicist, mathematician, and inventor.

B2.0 COMPARISON

The three temperature scales are graphically compared in Figure B-1.

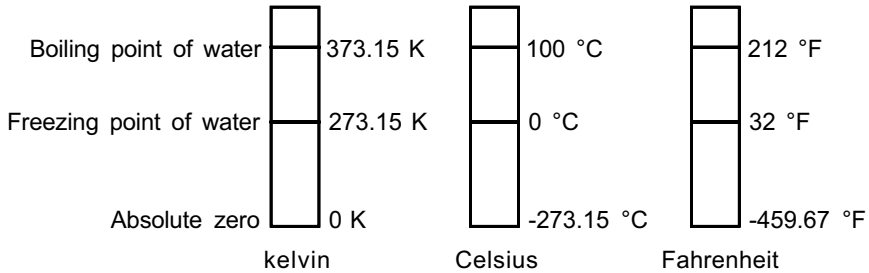

Figure B-1. Temperature Scale Comparison

B3.0 CONVERSIONS

To convert Fahrenheit to Celsius: subtract 32 from °F then divide by 1.8, or:

$$°C = (°F - 32) \div 1.8$$

To convert Celsius to Fahrenheit: multiply °C by 1.8 then add 32, or:

$$°F = (1.8 \times °C) + 32$$

To convert Fahrenheit to Kelvin, first convert °F to °C, then add 273.15.

To convert Celsius to Kelvin, add 273.15.

Table B-1. Temperature Conversion Table

°F	°C	K	°F	°C	K	°F	°C	K
-459.67	-273.15	0	-292	-180	93.15	-129.67	-89.82	183.33
-454	-270	3.15	-290	-178.89	94.26	-120	-84.44	188.71
-450	-267.78	5.37	-289.67	-178.71	94.44	-119.67	-84.26	188.89
-449.67	-267.59	5.56	-280	-173.33	99.82	-117.67	-83.15	190
-441.67	-263.15	10	-279.67	-173.15	100	-112	-80	193.15
-440	-262.22	10.93	-274	-170	103.15	-110	-78.89	194.26
-439.67	-262.04	11.11	-270	-167.78	105.57	-109.67	-78.71	194.44
-436	-260	13.15	-269.67	-167.59	105.56	-100	-73.33	199.82
-430	-256.67	16.48	-261.67	-163.15	110	-99.67	-73.15	200
-429.67	-256.48	16.67	-260	-162.22	110.93	-94	-70	203.15
-423.67	-253.15	20	-259.67	-162.04	111.11	-90	-67.78	205.37
-420	-251.11	22.04	-256	-160	113.15	-89.67	-67.59	205.56
-419.67	-250.93	22.22	-250	-156.67	116.48	-81.67	-63.15	210
-418.00	-250	23.15	-249.67	-156.48	116.67	-80	-62.22	210.93
-410	-245.56	27.59	-243.67	-153.15	120	-79.67	-62.04	211.11
-409.67	-245.37	27.78	-240	-151.11	122.04	-76	-60	213.15
-405.67	-243.15	30	-239.67	-150.93	122.22	-70	-56.67	216.48
-400	-240	33.15	-238	-150	123.15	-69.67	-56.48	216.67
-399.67	-239.82	33.33	-230	-145.56	127.59	-63.67	-53.15	220
-390	-234.44	38.71	-229.67	-145.37	127.78	-60	-51.11	222.04
-389.67	-234.26	38.89	-225.67	-143.15	130	-59.67	-50.93	222.22
-387.67	-233.15	40	-220	-140	133.15	-58	-50	223.15
-382	-230	43.15	-219.67	-139.82	133.33	-50	-45.56	227.59
-380	-228.89	44.26	-210	-134.44	138.71	-49.67	-45.37	227.78
-379.67	-228.71	44.44	-209.67	-134.26	138.89	-45.67	-43.15	230
-370	-223.33	49.82	-207.67	-133.15	140	-40	-40	233.15
369.67	-223.15	50	-202	-130	143.15	-39.67	-39.82	233.33
-364	-220	53.15	-200	-128.89	144.26	-30	-34.44	238.71
-360	-217.78	55.37	-199.67	-128.71	144.44	-29.67	-34.26	238.89
-359.67	-217.59	55.56	-190	-123.33	149.82	-27.67	-33.15	240
-351.67	-213.15	60	189.67	-123.15	150	-22	-30	243.15
-350	-212.22	60.93	-184	-120	153.15	-20	-28.89	244.26
-349.67	-212.04	61.11	-180	-117.78	155.37	-19.67	-28.71	244.44
-346	-210	63.15	-179.67	-117.59	155.56	-10	-23.33	249.82
-340	-206.67	66.48	-171.67	-113.15	160	-9.67	-23.15	250
-339.67	-206.48	66.67	-170	-112.22	160.93	-4	-20	253.15
-333.67	-203.15	70	-169.67	-112.04	161.11	0	-17.78	255.37
-330	-201.11	72.04	-166	-110	163.15	+0.33	-17.59	255.56
-329.67	-200.93	72.22	-160	-106.67	166.48	8.33	-13.15	260
-328	-200	73.15	-159.67	-106.48	166.67	10	-12.22	260.93
-320	-195.56	77.59	-153.67	103.15	170	10.33	-12.04	261.11
-319.67	-195.37	77.78	-150	-101.11	172.04	14	-10	263.15
-315.67	-193.15	80	-149.67	-100.93	172.22	20	-6.67	266.48
-310	-190	83.15	-148	-100	173.15	20.33	-6.48	266.67
-309.67	-189.82	83.33	-140	-95.96	177.59	26.33	-3.15	270
-300	-184.44	88.71	-139.67	-95.37	177.78	30	-1.11	272.04
-299.67	-184.26	88.89	-135.67	-93.15	180	30.33	-0.93	272.22
-297.67	-183.15	90	-130	-90	183.15	32	0	273.15

APPENDIX C

HANDLING LIQUID HELIUM AND NITROGEN

C1.0 GENERAL

Use of liquid helium (LHe) and liquid nitrogen (LN_2) is often associated with the Model 370 AC Resistance Bridge. Although not explosive, there are a number of safety considerations to keep in mind in the handling of LHe and LN_2.

C2.0 PROPERTIES

LHe and LN_2 are colorless, odorless, and tasteless gases. Gaseous nitrogen makes up about 78 percent of the Earth's atmosphere, while helium comprises only about 5 ppm. Most helium is recovered from natural gas deposits. Once collected and isolated, the gases will liquefy when properly cooled. A quick comparison between LHe and LN_2 is provided in Table C-1.

Table C-1. Comparison of Liquid Helium and Liquid Nitrogen

PROPERTY	LIQUID HELIUM	LIQUID NITROGEN
Boiling Point @1 atm, in K	4.2	77
Thermal Conductivity (Gas), w/cm–K	0.083	0.013
Latent Heat of Vaporization, Btu/liter	2.4	152
Liquid Density, pounds/liter	0.275	0.78

C3.0 HANDLING CRYOGENIC STORAGE DEWARS

Cryogenic containers (Dewars) must be operated in accordance with manufacturer instructions. Safety instructions will also be posted on the side of each Dewar. Cryogenic Dewars must be kept in a well-ventilated place where they are protected from the weather and away from any sources of heat. A typical cryogenic Dewar is shown in Figure C-1.

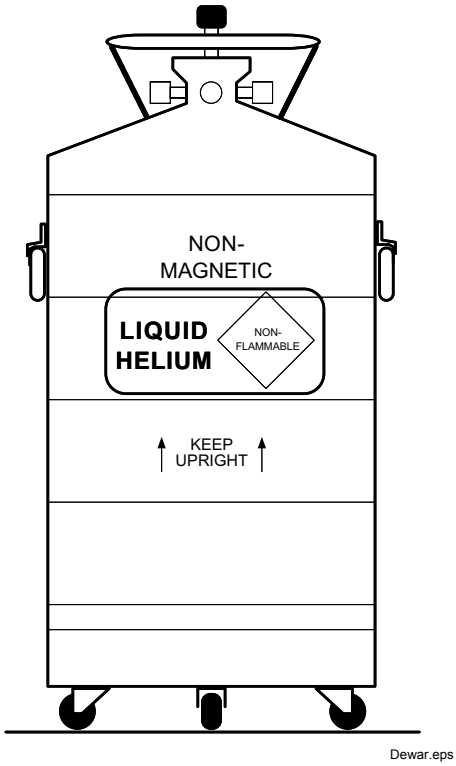

Figure C-1. Typical Cryogenic Storage Dewar

C4.0 LIQUID HELIUM AND NITROGEN SAFETY PRECAUTIONS

Transferring LHe and LN_2 and operation of the storage Dewar controls should be in accordance with the manufacturer/supplier's instructions. During this transfer, it is important that all safety precautions written on the storage Dewar and recommended by the manufacturer be followed.

WARNING: Liquid helium and liquid nitrogen are potential asphyxiants and can cause rapid suffocation without warning. Store and use in area with adequate ventilation. DO NOT vent container in confined spaces. DO NOT enter confined spaces where gas may be present unless area has been well ventilated. If inhaled, remove to fresh air. If not breathing, give artificial respiration. If breathing is difficult, give oxygen. Get medical help.

WARNING: Liquid helium and liquid nitrogen can cause severe frostbite to the eyes or skin. DO NOT touch frosted pipes or valves. In case of frostbite, consult a physician at once. If a physician is not readily available, warm the affected areas with water that is near body temperature.

The two most important safety aspects to consider when handling LHe and LN_2 are adequate ventilation and eye and skin protection. Although helium and nitrogen gases are non-toxic, they are dangerous in that they replace the air in a normal breathing atmosphere. Liquid products are of an even greater threat since a small amount of liquid evaporates to create a large amount of gas. Therefore, it is imperative that cryogenic Dewars be stored and the cryogenic system be operated in open and well ventilated areas.

Persons transferring LHe and LN_2 should make every effort to protect eyes and skin from accidental contact with liquid or the cold gas issuing from it. Protect your eyes with full face shield or chemical splash goggles. Safety glasses (even with side shields) are not adequate. Always wear special cryogenic gloves (Tempshield Cryo-Gloves® or equivalent) when handling anything that is, or may have been, in contact with the liquid or cold gas, or with cold pipes or equipment. Long sleeve shirts and cuffless trousers that are of sufficient length to prevent liquid from entering the shoes are recommended.

C5.0 RECOMMENDED FIRST AID

Every site that stores and uses LHe and LN_2 should have an appropriate Material Safety Data Sheet (MSDS) present. The MSDS may be obtained from the manufacturer/distributor. The MSDS will specify the symptoms of overexposure and the first aid to be used. A typical summary of these instructions is provided as follows.

If symptoms of asphyxia such as headache, drowsiness, dizziness, excitation, excess salivation, vomiting, or unconsciousness are observed, remove the victim to fresh air. If breathing is difficult, give oxygen. If breathing has stopped, give artificial respiration. Call a physician immediately.

If exposure to cryogenic liquids or cold gases occurs, restore tissue to normal body temperature (98.6°F) as rapidly as possible, then protect the injured tissue from further damage and infection. Call a physician immediately. Rapid warming of the affected parts is best achieved by bathing it in warm water. The water temperature should not exceed 105 °F (40 °C), and under no circumstances should the frozen part be rubbed, either before or after rewarming. If the eyes are involved, flush them thoroughly with warm water for at least 15 minutes. In case of massive exposure, remove clothing while showering with warm water. The patient should not drink alcohol or smoke. Keep warm and rest. Call a physician immediately.