Miscellaneous Accessories

Heat sink bobbins

Heat sink bobbins for cryostat lead wires are gold-plated OFHC or ETP copper for removing heat flowing down sensor leads. The small bobbin holds 4 to 8 phosphor bronze or manganin wires, and the large bobbin holds up to 40, depending on wire gauge and number of wraps. 4 or 5 wraps are usually sufficient, using VGE-7031 varnish or Stycast® epoxy for potting the wires. Do not use copper or other high conductivity wires.

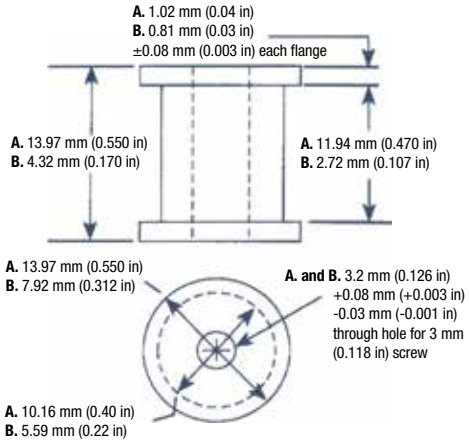

Ordering information

Part number	Description
HSB-40	Large heat sink bobbin (use "A" dimensions)
HSB-8	Small heat sink bobbin (use "B" dimensions)

Beryllium oxide heat sink chip

Beryllium oxide heat sink chips can be used to heat sink electrical leads or samples at low temperature with good electrical isolation. They can also be used as a buffer layer to take up expansion mismatch between an object with large expansion coefficient (e.g., copper, epoxy) and an object with a low expansion coefficient (e.g., a DT-670-SD diode sensor). One side is fully metallized with molybdenum/manganese, followed by nickel and gold. It is easily soldered with In/Ag solders. Sn/Pb solders can pull up metallization under some circumstances. The other side has two 1.27 mm (0.05 in) by 4.06 mm (0.16 in) electrically isolated solder pads. The thermal conductivity is several times that of copper in the liquid nitrogen region but about 1000 times lower at liquid helium temperature. The magnetic susceptibility is about that of non-magnetic stainless steel.

Note: *Due to metallization irregularities and surface dirt, it is not recommended that these chips isolate more than 100 V.*

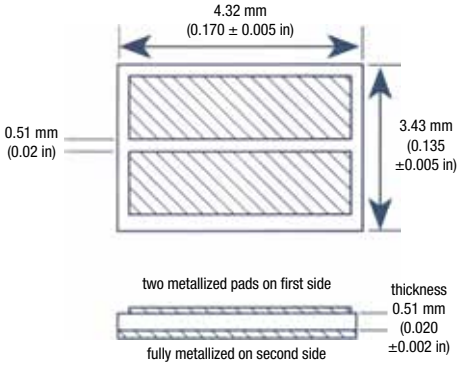

Ordering information

Part number	Description
HSC-4	Heat sink chip (package of 10)

19-pin vacuum feedthrough

This hermetically sealed glass-to-metal electronic connector is designed to meet the dimensional requirements of MIL-C-26482 and is furnished with a silicone o-ring to seal against the mating connector plug shell. It is commonly used to pass electrical signals into a vacuum chamber from the outside.

Note: *The VFT19-FMC threads should be sealed with Teflon® tape or epoxy if a vacuum seal is important.*

VFT19

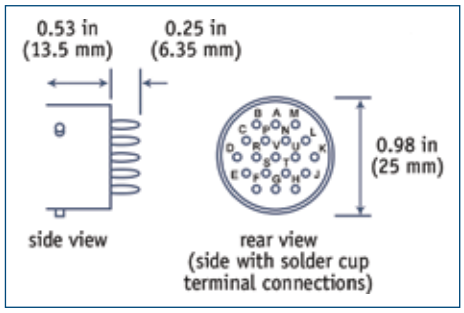

VFT19-F

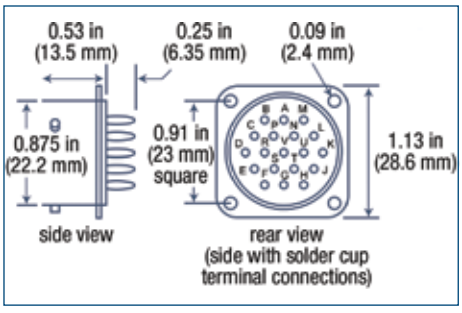

VFT19-FMC

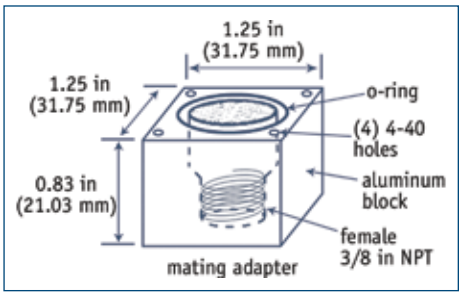

VFT19-MC

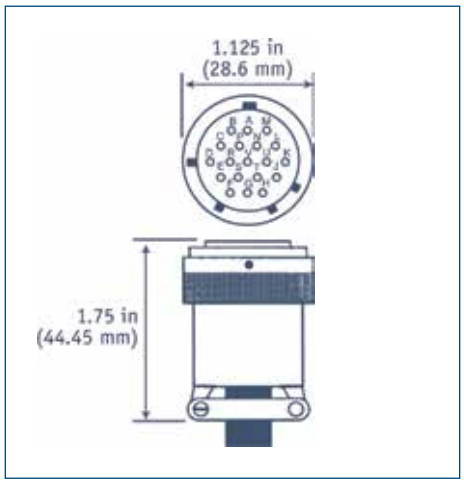

Specifications

Shell: Mild steel
Contacts: High nickel iron alloy
Finish: Fused tin over cadmium

Ordering information

Part number	Description
VFT19	19-pin vacuum feedthrough
VFT19-F	19-pin vacuum feedthrough in flange
VFT19-FMC	Mating adapter for mounting VFT19-F to 3/8 NPT hole pipe feedthrough
VFT19-MC	Mating connector plug to VFT19 and VFT19-F

4-lead resistance sample holder

- 4 pre-tinned and drilled solder pads
- Plug-in convenience (4-pin plug)
- Mating socket included

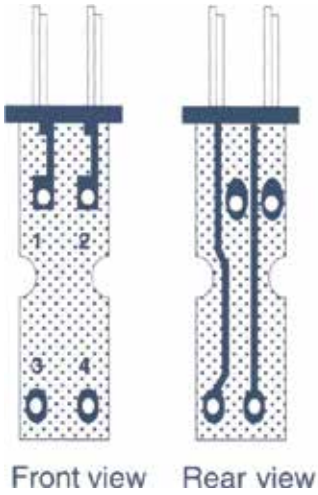

Specifications

Temperature range: 4.2 K to 373 K (-269 °C to 100 °C)
Current: 1 A at 100 VDC
Insertion force: 227 g (8 oz) per pin
Dimensions: 5.1 mm wide × 27.9 mm long (0.2 in wide × 1.1 in long)
Hole diameter: 0.8 mm (0.03125 in)
Hole spacing: 2.5 mm (0.1 in) between holes 1 & 2 and 3 & 4; 15.2 mm (0.6 in) between holes 1 & 4 and 2 & 3
Mating connector: Black thermoplastic
Sockets: Phosphor bronze with gold over nickel
Socket diameter: 0.41 mm to 0.51 mm (0.016 in to 0.020 in square)
Socket depth: 2.03 mm to 6.35 mm (0.080 in to 0.25 in)

Ordering information

Part number	Description
700RSH	4-lead resistance sample holder and mating connector; 200 cycle minimum when used below room temperature

Cartridge heaters

- Precision-wound nickel-chromium resistance wire
- Efficient magnesium oxide insulation
- CSA component recognition
- 2 solid pins
- High-temperature rated INCOLOY® case*

** The nickel lead wires and INCOLOY (iron/nickel/chromium alloy) case make these heaters unsuitable for magnetically sensitive locations*

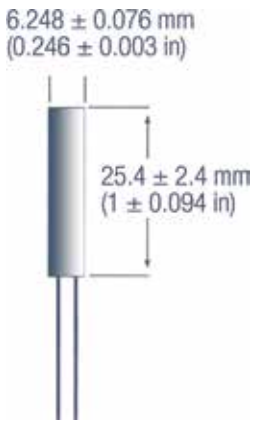

Lake Shore cartridge heaters can be used with all of our temperature controllers. Heaters have wattage ratings in dead air. In cryogenic applications, these cartridge heaters can handle many times the rated value if properly heat sunk or in liquid.

Specifications

Diameter: 6.248 mm ±0.076 mm (0.246 in ±0.003 in) recommended to fit hole of 6.35 mm (0.25 in)
Insulation between leads and case: Magnesium oxide**
Leads: Nickel, 0.635 mm (0.025 in) diameter × 50.8 mm (2 in) long

*** Dielectric strength of insulation is reduced when hot, forming leakage current*

Ordering information

Part number	Length	V	Ω	W
HTR-50	25.4 ± 2.4 mm	50	50	50
HTR-25-100	(1 ± 0.094 in)	50	25	100

Electrical tape for use at cryogenic temperatures

- Excellent tape for use at cryogenic temperatures—does not degrade with time like masking tape
- CHR Industries electrical tape
- Yellow polyester film

Specifications at 25 °C

Backing: Polyester film
Temperature class (upper limit): 403 K (130 °C)
Total thickness: 0.064 mm (0.0025 in)
Dielectric breakdown: 5 kV
Insulation resistance: >1 MΩ
Breaking strength: 55 N (12.5 lb)
Elongation: 100% at break

Ordering information

Part number	Description
T3M-72	1 roll cryogenic tape 12.7 mm × 65.8 m (0.5 in × 72 yd)

Ferrite bead for high frequency filtering

RF pickup can affect an experiment by upsetting the instrument reading, by being rectified by a diode thermometer to appear as an offset, or by transmitting through the system wiring to pollute the experimental environment. A ferrite bead will reduce the effect of RF pickup on instrument leads by acting like a high impedance (resistance) to high frequency noise. DC and slow moving signals are not affected. The bead can be clamped around existing wiring for ease of installation.

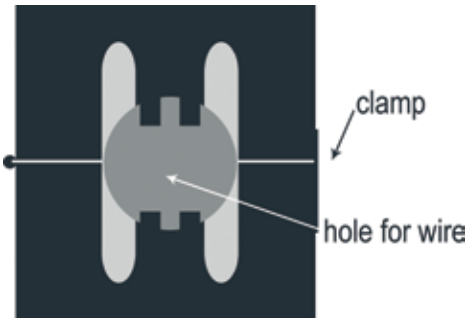

Specifications

Material: Fair-Rite® 43
Impedance with wire passed once through bead: 110 Ω at 25 MHz, 225 Ω at 100 MHz
Impedance with wire passed twice through bead: 440 Ω at 25 MHz, 900 Ω at 100 MHz
Construction: 2 halves of a ferrite bead held by a plastic clamp
Overall dimensions: 22.1 mm × 23.4 mm × 32.3 mm (0.87 in × 0.92 in × 1.27 in)
Cable opening diameter: 10.2 mm (0.4 in)
Temperature range: 288 K to 308 K (15 °C to 35 °C)
Weight: 0.046 kg (0.1 lb)

Ordering information

Part number	Description
2071	Ferrite bead