User's Manual

240 Series

Cryogenic Sensor Input Module

Model 240-2P

Model 240-8P



Lake Shore Cryotronics, Inc.
575 McCorkle Blvd.
Westerville, Ohio 43082-8888 USA

sales@lakeshore.com
support@lakeshore.com
www.lakeshore.com

Fax: (614) 891-1392
Telephone: (614) 891-2243

Methods and apparatus disclosed and described herein have been developed solely on company funds of Lake Shore Cryotronics, Inc. No government or other contractual support or relationship whatsoever has existed which in any way affects or mitigates proprietary rights of Lake Shore Cryotronics, Inc. in these developments. Methods and apparatus disclosed herein may be subject to U.S. Patents existing or applied for.

Lake Shore Cryotronics, Inc. reserves the right to add, improve, modify, or withdraw functions, design modifications, or products at any time without notice. Lake Shore shall not be liable for errors contained herein or for incidental or consequential damages in connection with furnishing, performance, or use of this material.

Rev. 1.9 P/N 119-241 31 August 2026

LAKE SHORE LIMITED WARRANTY

WARRANTY PERIOD: THREE (3) YEARS for all products except system products. System products are TWO (2) YEARS. System products include but are not limited to; modular characterization systems, vibrating sample magnetometer systems, cryogenic probe stations, Hall effect systems, electromagnets, electromagnet power supplies, superconducting magnet systems, superconducting magnet power supplies, liquid nitrogen cooled cryostats, liquid helium-cooled cryostats, cryogen-free cryostats, and associated options and accessories.

Manufacturer Limited Warranty. The following is the limited warranty that Manufacturer offers on its Products. Distributor agrees that it shall not extend, expand or otherwise modify this limited warranty in any manner.

1. Lake Shore Cryotronics, Inc. ("Lake Shore") warrants that products manufactured by Lake Shore (the "Product") will be free from defects in materials and workmanship for the "Warranty Period" which starts on the date of shipment of the Product.
2. If Lake Shore receives notice of any such defects during the Warranty Period and the defective Product is shipped freight prepaid back to Lake Shore, Lake Shore will, at its option, either repair or replace the Product (if it is so defective) without charge for parts, service labor or associated customary return shipping cost to the Purchaser. Replacement for the Product may be by either new or equivalent in performance to new. Replacement or repaired parts, or a replaced Product, will be warranted for only the unexpired portion of the original warranty or 90 days (whichever is greater).
3. Lake Shore warrants the Product only if the Product has been sold by an authorized Lake Shore employee, sales representative, distributor or an authorized Lake Shore original equipment manufacturer (OEM).
4. The Product may contain remanufactured parts equivalent to new in performance or may have been subject to incidental use when it is originally sold to the Purchaser.
5. The Warranty Period begins on the date the Product ships from Lake Shore's plant.
6. This limited warranty does not apply to problems with the Product resulting from (a) improper or inadequate installation (unless OT&V services are performed by Lake Shore), maintenance, repair or calibration, (b) fuses, software, power surges, lightning and non-rechargeable batteries, (c) software, interfacing, parts or other supplies not furnished by Lake Shore, (d) unauthorized modification or misuse, (e) operation outside of the published specifications, (f) improper site preparation or site maintenance (g) natural disasters such as flood, fire, wind, or earthquake, or (h) damage during shipment other than original shipment to you if shipped through a Lake Shore carrier.
7. This limited warranty does not cover: (a) regularly scheduled or ordinary and expected recalibrations of the Product; (b) accessories to the Product (such as probe tips and cables, holders, wire, grease, varnish, feedthroughs, etc.); (c) consumables used in conjunction with the Product (such as probe tips and cables, probe holders, sample tails, rods and holders, ceramic putty for mounting samples, Hall sample cards, Hall sample enclosures, etc.); or, (d) non-Lake Shore branded Products that are integrated with the Product.
8. TO THE EXTENT ALLOWED BY APPLICABLE LAW, THIS LIMITED WARRANTY IS THE ONLY WARRANTY APPLICABLE TO THE PRODUCT AND REPLACES ALL OTHER WARRANTIES OR CONDITIONS, EXPRESS OR IMPLIED, INCLUDING, BUT NOT LIMITED TO, THE IMPLIED WARRANTIES OR CONDITIONS OF MERCHANTABILITY AND FITNESS FOR A PARTICULAR PURPOSE. Specifically, except as provided herein, Lake Shore undertakes no responsibility that the products will be fit for any particular purpose for which you may be buying the Products. Any implied warranty is limited in duration to the warranty period. No oral or written information, or advice given by Lake Shore, its agents or employees, shall create a warranty or in any way increase the scope of this limited warranty. Some countries, states or provinces do not allow limitations on an implied warranty, so the above limitation or exclusion might not apply to you. This limited warranty gives you specific legal rights and you might also have other rights that vary from country to country, state to state or province to province.
9. Further, with regard to the United Nations Convention for International Sale of Goods (CISC,) if CISG is found to apply in relation to the goods covered by this limited warranty, which is specifically disclaimed by Lake Shore, then this limited warranty excludes warranties that: (a) the Product is fit for the purpose for which goods of the same description would ordinarily be used, (b) the Product is fit for any particular purpose expressly or impliedly made known to Lake Shore at the time of the purchase of the Product, (c) the Product is contained or packaged in a manner usual for such goods or in a manner adequate to preserve and protect such goods where it is shipped by someone other than a carrier hired by Lake Shore.
10. Lake Shore disclaims any warranties of technological value or of non-infringement with respect to the Product and Lake Shore shall have no duty to defend, indemnify, or hold harmless you from and against any or all damages or costs incurred by you arising from the infringement of patents or trademarks or violation or copyrights by the Product.
11. This limited warranty is not transferrable.
12. EXCEPT TO THE EXTENT PROHIBITED BY APPLICABLE LAW, NEITHER LAKE SHORE NOR ANY OF ITS SUBSIDIARIES, AFFILIATES OR SUPPLIERS WILL BE HELD LIABLE FOR DIRECT, SPECIAL, INCIDENTAL, CONSEQUENTIAL OR OTHER DAMAGES (INCLUDING LOST PROFIT, LOST DATA, OR DOWNTIME COSTS) ARISING OUT OF THE USE, INABILITY TO USE OR RESULT OF USE OF THE PRODUCT, WHETHER BASED IN WARRANTY, CONTRACT, TORT OR OTHER LEGAL THEORY, REGARDLESS WHETHER OR NOT LAKE SHORE HAS BEEN ADVISED OF THE POSSIBILITY OF SUCH DAMAGES. PURCHASER'S USE OF THE PRODUCT IS ENTIRELY AT PURCHASER'S RISK. SOME COUNTRIES, STATES AND PROVINCES DO NOT ALLOW THE EXCLUSION OF LIABILITY FOR INCIDENTAL OR CONSEQUENTIAL DAMAGES, SO THE ABOVE LIMITATION MAY NOT APPLY TO YOU.
13. This limited warranty gives the purchaser specific legal rights, and the purchaser may also have other rights that vary within or between jurisdictions where the Product is purchased and/or used. Some jurisdictions do not allow limitation in certain warranties, and so the above limitations or exclusions of some warranties stated above may not apply to all purchasers.
14. Except to the extent allowed by applicable law, the terms of this limited warranty do not exclude, restrict or modify the mandatory statutory rights applicable to the sale of the Product to you.

CERTIFICATION

Lake Shore certifies that this product has been inspected and tested in accordance with its published specifications and that this product met its published specifications at the time of shipment. The accuracy and calibration of this product at the time of shipment are traceable to the United States National Institute of Standards and Technology (NIST); formerly known as the National Bureau of Standards (NBS).

FIRMWARE LIMITATIONS

Lake Shore has worked to ensure that the firmware is as free of errors as possible, and that the results you obtain from the instrument are accurate and reliable. However, as with any computer-based software, the possibility of errors exists.

In any important research, as when using any laboratory equipment, results should be carefully examined and rechecked before final conclusions are drawn. Neither Lake Shore nor anyone else involved in the creation or production of this firmware can pay for loss of time, inconvenience, loss of use of the product, or property damage caused by this product or its failure to work, or any other incidental or consequential damages. Use of our product implies that you understand the Lake Shore license agreement and statement of limited warranty.

FIRMWARE LICENSE AGREEMENT

The firmware in this instrument is protected by United States copyright law and international treaty provisions. To maintain the warranty, the code contained in the firmware must not be modified. Any changes made to the code is at the user's risk. Lake Shore will assume no responsibility for damage or errors incurred as result of any changes made to the firmware.

Under the terms of this agreement you may only use the firmware as physically installed in the instrument. Archival copies are strictly forbidden. You may not decompile, disassemble, or reverse engineer the firmware. If you suspect there are problems with the firmware, return the instrument to Lake Shore for repair under the terms of the Limited Warranty specified above. Any unauthorized duplication or use of the firmware in whole or in part, in print, or in any other storage and retrieval system is forbidden.

TRADEMARK ACKNOWLEDGMENT

Many manufacturers and sellers claim designations used to distinguish their products as trademarks. Where those designations appear in this manual and Lake Shore was aware of a trademark claim, they appear with initial capital letters and the ™ or ® symbol.
Apiezon™ is a registered trademark of M&I Materials, Ltd.
CalCurve™, Cernox™, SoftCal™, Rox™, Curve Handler™, MeasureLINK™ are trademarks of Lake Shore Cryotronics, Inc.
Java™ is a registered trademark of Sun Microsystems, Inc. of Santa Clara, CA
LabVIEW® is a registered trademark of National Instruments.
Mac® is a registered trademark of Apple, Inc., registered in the U.S and other countries.
Microsoft Windows®, Excel®, and Windows Vista® are registered trademarks of Microsoft Corporation in the United States and other countries.
Stycast® is a trademark of Emerson & Cuming.
WinZip™ is a registered trademark of Nico Mak of Connecticut.
TIA Portal® is a registered trademark of Siemens Corporation.

COMPLIANCE AND CERTIFICATIONS

See https://www.lakeshore.com/compliance/.

Copyright 2016 – 2026 Lake Shore Cryotronics, Inc. All rights reserved. No portion of this manual may be reproduced, stored in a retrieval system, or transmitted, in any form or by any means, electronic, mechanical, photocopying, recording, or otherwise, without the express written permission of Lake Shore.

Table of Contents

Chapter 1: Introduction

1.1 Product Description 1
1.1.1 MeasureLINK™ Software 2
1.2 Sensor Selection 2
1.3 Specifications 2
1.4 Safety Summary and Symbols 3

Chapter 2: Cooling System Design and Temperature Control

2.1 General 5
2.2 Temperature Sensor Selection 5
2.2.1 Temperature Range 5
2.2.2 Sensor Sensitivity 5
2.2.3 Environmental Conditions 6
2.2.4 Measurement Accuracy 6
2.2.5 Sensor Package 6
2.3 Sensor Calibrations 7
2.3.1 Precision Calibration 7
2.3.2 Sensors Using Standard Curves 7
2.3.3 MeasureLINK™ for the 240 Series 7
2.4 Sensor Installation 8
2.4.1 Mounting Materials 8
2.4.2 Sensor Location 8
2.4.3 Thermal Conductivity 8
2.4.4 Contact Area 8
2.4.5 Contact Pressure 9
2.4.6 Lead Wire 9
2.4.7 Lead Soldering 10
2.4.8 Thermal Anchoring Leads 10
2.4.9 Thermal Radiation 10
2.5 Consideration for Good Control 11
2.5.1 Thermal Conductivity 11
2.5.2 Thermal Lag 11
2.5.3 Two-Sensor Approach 11
2.5.4 Thermal Mass 11
2.5.5 System Non-Linearity 11

Chapter 3: Installation

3.1 General 13
3.2 Inspection and Unpacking 13
3.2.1 Packing List 13
3.3 Physical Installation 14
3.4 Power Connections and PROFIBUS-DP Interface 14
3.4.1 Power 14
3.4.2 Configure the USB/PC Connection 14
3.4.3 RS-485/PROFIBUS Interface 14
3.4.4 Backplane 15
3.4.5 Power and RS-485 Connections 16
3.4.6 RS-485 Grounding and Shielding 17
3.4.7 RS-485 Termination 17
3.5 Diode/Resistor Sensor Inputs 18
3.5.1 Sensor Input Connector and Pin Out 18
3.5.2 Input Configuration 19
3.5.3 Sensor Lead Cable 19
3.5.4 Grounding and Shielding Sensor Leads 19
3.5.5 Sensor Polarity 20
3.5.6 Four-Lead Sensor Measurement 20
3.5.7 Two-Lead Sensor Measurement 21
3.5.8 Lowering Measurement Noise 21

Chapter 4: Configuration

4.1 General 23
4.2 Configuration 23
4.2.1 Physical Connection 23
4.2.2 Configuration Tools 23
4.3 Programming Using MeasureLINK™ for the 240 Series 24
4.3.1 Connecting to MeasureLINK™ 24
4.3.2 MeasureLINK™ for the 240 Series Interface Overview 25
4.3.3 Module Settings 25
4.3.4 Input Settings 26
4.3.5 Readings Pane and 240 Series Front Display 29
4.3.6 Evaluation Kit (optional) 30

Chapter 5: Operation

5.1 General 31
5.2 PROFIBUS-DP 31
5.2.1 GSD File 31
5.2.2 Configuration as a Modular Station 32
5.2.3 Establishing Communication 32
5.2.4 RS-485 Mode 33
5.3 Lake Shore Serial Communications 34
5.3.1 USB Interface 34
5.3.2 RS-485 Mode 34
5.3.3 Communication 35
5.3.4 Message Flow Control 36
5.3.5 Communication LED Status Indicators 36
5.3.6 Command Summary 37
5.4 Modbus RTU 46
5.4.1 Overview 46
5.4.2 Configuration via USB 46
5.4.3 Quick Start 47
5.4.4 Communication Status LED Indicators 47
5.4.5 Modbus Communication Configuration Commands 48
5.4.6 Register Map 49

Chapter 6: Options and Accessories

6.1 General 57
6.2 Models 57
6.3 Accessories 57

Chapter 7: Service

7.1 General 59
7.2 USB Troubleshooting 59
7.2.1 New Installation 59
7.2.2 Existing Installation No Longer Working 59
7.3 Factory Reset 60
7.4 Error Messages 60
7.5 Calibration Procedure 60
7.6 Electrostatic Discharge 60
7.6.1 Identification of Electrostatic Discharge Sensitive Components 60
7.7 Firmware Updates 61
7.7.1 Updating the Firmware 61
7.8 Summary of Internal Memory Devices 61
7.9 Technical Inquiries 62
7.9.1 Contacting Lake Shore 62
7.9.2 Return of Equipment 62
7.9.3 RMA Valid Period 63
7.9.4 Shipping Charges 63
7.9.5 Restocking Fee 63

Chapter 1: Introduction



FIGURE 1-1 ***Model 240-2P and Model 240-8P front views***

1.1 Product Description

Features of the 240 Series input module:

- Two or eight cryogenic temperature sensor inputs
- Supports industry-leading Lake Shore Cernox, platinum, and other RTDs, plus DT-670 diodes
- Precision measurement circuitry with on-board conversion to calibrated temperature units
- Monitor temperatures down to 1 K and up to 800 K
- Current reversal to minimize thermoelectric offsets
- Front-mounted OLED screen for temperature and status reporting
- Fully configurable through direct USB connection
- PROFIBUS-DP communication integrates with distributed PLC-based control architectures
- Easy DIN rail mounting with integrated rear connections for shared power and network

The 240 Series input module offers a convenient, modular input solution for precision monitoring of cryogenic temperature sensors in large-scale applications employing distributed PLC-based control.

Lake Shore bench top cryogenic instruments are trusted throughout the world for precision temperature measurement—now that same measurement performance can be achieved in widely distributed “big physics” applications like particle accelerators and fusion reactors as well as other large industrial sites.

1.1.1 MeasureLINK™ Software

MeasureLINK™-MCS software and MeasureLINK™ for the 240 Series are two separate software programs:

- MeasureLINK™-MCS software is a general purpose environmental and measurement control package for making system level measurements on Lake Shore systems products.
- MeasureLINK™ for the 240 Series is a free program, intended solely for the setup of the model 240 Series, which makes loading temperature curves into the 240 Series input module a very simple process. The program configures the module and copies curves from formatted files into the 240 Series input module.

1.2 Sensor Selection

See the table below for sensor selection.

		Model	Useful range	Magnetic field use
Diodes	**Silicon diode**	DT-670-SD	1.4 K to 500 K	T# 60 K & B " 3 T
	GaAlAs diode	TG-120-P	1.4 K to 325 K	T > 4.2 K & B " 5 T
	GaAlAs diode	TG-120-SD	1.4 K to 500 K	T > 4.2 K & B " 5 T
Positive Temperature Coefficient RTDs	**100) platinum**	PT-102/3	14 K to 873 K	T > 40 K & B " 2.5 T
	100) platinum	PT-111	14 K to 673 K	T > 40 K & B " 2.5 T
Negative Temperature Coefficient RTDs	**Cernox™**	CX-1010	0.3 K to 325 K[1]	T > 2 K & B " 19 T
	Cernox™	CX-1030-HT	0.3 K to 420 K[1, 2]	T > 2 K & B " 19 T
	Cernox™	CX-1050-HT	1.4 K to 420 K[1]	T > 2 K & B " 19 T
	Cernox™	CX-1070-HT	4 K to 420 K[1]	T > 2 K & B " 19 T
	Cernox™	CX-1080-HT	20 K to 420 K[1]	T > 2 K & B " 19 T
	Germanium	GR-300-AA	0.35 K to 100 K[2]	Not recommended
	Germanium	GR-1400-AA	1.8 K to 100 K[2]	Not recommended
	Rox™	RX-102	0.3 K to 40 K[2]	T > 2 K & B " 10 T
	Rox™	RX-103	1.4 K to 40 K	T > 2 K & B " 10 T
	Rox™	RX-202	0.3 K to 40 K[2]	T > 2 K & B " 10 T

1 Non-HT version maximum temperature: 325 K
2 Low temperature specified with self-heating error: " 5 mK

TABLE 1-1 ***Sensor temperature range***

1.3 Specifications

Full specifications are provided on our website. Please see the Technical Specifications page at: https://www.lakeshore.com/240/.

Feature	Description
Operating temperature	15 °C to 35 °C at rated accuracy; -20 °C to 50 °C at reduced accuracy
Storage temperature	-40 °C to 85 °C
Voltage requirement	24 VDC, ±10%
Relative humidity	0 to 70% at rated accuracy, reduced accuracy up to 95%, non-condensing
Size	
240-2P	22.5 mm wide × 115 mm high × 100 mm long (240-2P) (0.9 in × 4.5 in × 3.9 in)
240-8P	90 mm wide × 115 mm high × 100 mm long (240-2P) (3.5 in × 4.5 in × 3.9 in)
Weight	
240-2P	120 g (4.2 oz)
240-8P	300 g (10.6 oz)
Approval	CE, UKCA

TABLE 1-2 ***Key specifications***

1.4 Safety Summary and Symbols

Observe these general safety precautions during all phases of instrument operation, service, and repair. Failure to comply with these precautions or with specific warnings elsewhere in this manual violates safety standards of design, manufacture, and intended instrument use. Lake Shore Cryotronics, Inc. assumes no liability for customer failure to comply with these requirements.

The 240 Series input module protects the operator and surrounding area from electric shock or burn, mechanical hazards, excessive temperature, and spread of fire from the instrument. Environmental conditions outside of the conditions below may pose a hazard to the operator and surrounding area:

- Indoor use
- Altitude to 2000 m
- Temperature for safe operation: -20 °C to 50 °C
- Maximum relative humidity: 95% non-condensing
- Power supply voltage fluctuations not to exceed ±10% of the nominal voltage
- Overvoltage category II
- Pollution degree 2
- IP20: not protected against harmful ingress of water

WARNING

Liquid helium and liquid nitrogen are potential asphyxiants and can cause rapid suffocation without warning. Store and use in area with adequate ventilation. DO NOT vent container in confined spaces. DO NOT enter confined spaces where gas may be present unless area has been well ventilated. If inhaled, remove to fresh air. If not breathing, give artificial respiration. If breathing is difficult, give oxygen. Get medical help.

WARNING

Liquid helium and liquid nitrogen can cause severe frostbite to the eyes or skin. DO NOT touch frosted pipes or valves. In case of frostbite, consult a physician at once. If a physician is not readily available, warm the affected areas with water that is near body temperature.

For safety information, see:

- Cryogen Dewar Manufacturer's guidance, as appropriate
- The Cryogen SDS (Safety Data Sheet) available from the Cryogen supplier
- The Compressed Gas Association reference, Safe Handling of Cryogenic Liquids, CGA P-12-2017
- Applicable Occupational Health and Safety Authorities for your jurisdiction

Ground the Instrument

To minimize shock hazard, the instrument is equipped with a grounded connection to the DIN rail. Connect the DIN rail to an electrical ground.

Ventilation

The instrument has ventilation holes. Reduced or blocked ventilation may increase the internal temperature, which may affect the product's measurement performance.

Do Not Operate in an Explosive Atmosphere

Do not operate the instrument in the presence of flammable gases or fumes. Operation of any electrical instrument in such an environment constitutes a definite safety hazard.

Do Not Substitute Parts or Modify Instrument

Do not install substitute parts or perform any unauthorized modification to the instrument. Return the instrument to an authorized Lake Shore Cryotronics, Inc. representative for service and repair to ensure that safety features are maintained.

Cleaning
Do not submerge instrument. Clean only with a damp cloth, exterior only.

Installation
When installing the instrument, ensure it is mounted securely on the DIN rail. For further information, see section 3.3.

Improper Use
If the instrument is used in a manner that is not specified by Lake Shore, the safety protections provided by the instrument are no longer guaranteed, and may be impaired.

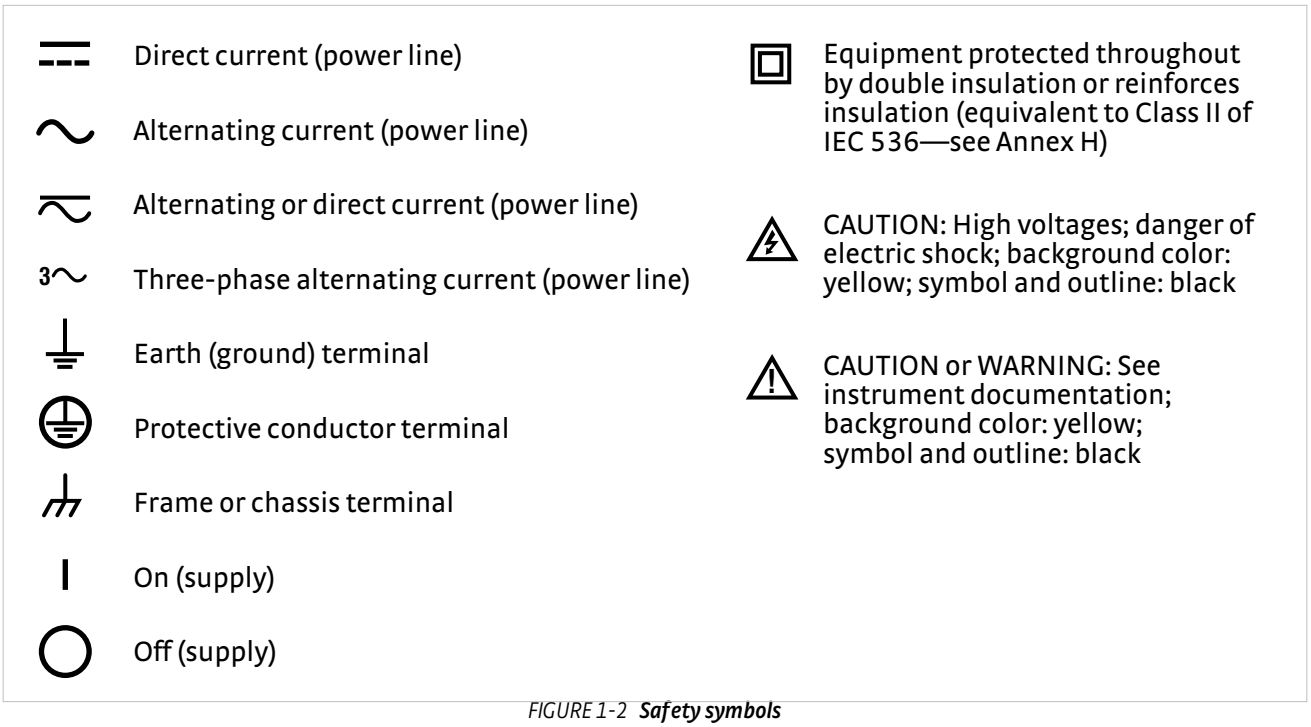

FIGURE 1-2 ***Safety symbols***

Chapter 2: Cooling System Design and Temperature Control

2.1 General

Selecting the proper cryostat or cooling source is probably the most important decision in designing a temperature control system. The cooling source defines the minimum temperature, cool-down time, and cooling power. Information on choosing a cooling source is beyond the scope of this manual. This chapter provides information on how to get the best temperature measurement from cooling sources with proper setup, including sensor installation.

2.2 Temperature Sensor Selection

This section attempts to answer some of the basic questions concerning temperature sensor selection. Additional useful information on temperature sensor selection is available in the Lake Shore Temperature Measurement and Control Catalog. The catalog has a large reference section that includes sensor characteristics and sensor selection criteria.

2.2.1 Temperature Range

Several important sensor parameters must be considered when choosing a sensor. The first is temperature range. The experimental temperature range must be known when choosing a sensor. Some sensors can be damaged by temperatures that are either too high or too low. Manufacturer recommendations should always be followed.

Sensor sensitivity changes with temperature and can limit the useful range of a sensor. It is important not to specify a range larger than necessary. If an experiment is being done at liquid helium temperature, a very high sensitivity is needed for good measurement resolution at that temperature. That same resolution may not be required to monitor warm up to room temperature. Two different sensors may be required to tightly cover the range from base temperature to room temperature, but lowering the resolution requirement on warm up may allow a less expensive, one sensor solution.

Another thing to consider when choosing a temperature sensor is that instruments like the 240 Series input module are not suitable to read some sensors over their entire temperature range. Lake Shore sells calibrated sensors that operate down to 20 mK, but the 240 Series input module is limited to above 1 K in its standard configuration.

2.2.2 Sensor Sensitivity

Temperature sensor sensitivity is a measure of how much a sensor signal changes when the temperature changes. It is an important sensor characteristic because so many measurement parameters are related to it. Resolution, accuracy, noise floor, and even control stability depend on sensitivity. Many sensors have different sensitivities at different temperatures. For example, a platinum sensor has good sensitivity at higher temperatures, but has limited use below 30 K because its sensitivity drops sharply. It is difficult to determine if a sensor has adequate sensitivity over the experimental temperature range. This manual has specifications (section 1.3) that include sensor sensitivity translated into temperature resolution and accuracy at different points. This is typical sensor response and can be used as a guide when choosing a sensor to be used with the 240 Series input module.

2.2.3 Environmental Conditions

The experimental environment is also important when choosing a sensor. Environmental factors such as high vacuum, magnetic field, corrosive chemicals, or even radiation can limit the use of some types of sensors. Lake Shore has devoted much time to developing sensor packages that withstand the temperatures, vacuum levels, and bonding materials found in typical cryogenic cooling systems.

Experiments done in magnetic fields are very common. Field dependence of temperature sensors is an important selection criteria for sensors used in these experiments. This manual briefly qualifies the field dependence of most common sensors in the specifications (section 1.3). Detailed field dependence tables are included in the Lake Shore Temperature Measurement and Control Catalog. When available, specific data on other environmental factors is also included in the catalog.

2.2.4 Measurement Accuracy

Temperature measurements have several sources of uncertainty that reduce accuracy. Be sure to account for errors induced by both the sensor and the instrumentation when computing accuracy. The instrument has measurement error in reading the sensor signal, and error in calculating a temperature using a temperature response curve. Error results from the sensor being compared to a calibration standard, and the temperature response of a sensor, will shift over time with repeated thermal cycling (from very cold temperatures to room temperature). Instrument and sensor manufacturers specify these errors, but there are things you can do to maintain good accuracy. For example, choose a sensor that has good sensitivity in the most critical temperature range, as sensitivity can minimize the effect of most error sources. Install the sensor properly following guidelines in section 2.4. Have the sensor and instrument periodically recalibrated, or in some other way null the time-dependent errors. Use a sensor calibration that is appropriate for the accuracy requirement.

2.2.5 Sensor Package

Many types of sensors can be purchased in different packages. Some types of sensors can be purchased as bare chips without any package. A sensor package generally determines its size, thermal and electrical contact to the outside, and sometimes limits its temperature range. When choosing a sensor, consider the mounting surface and how leads will be thermally anchored.

2.3 Sensor Calibrations

Lake Shore provides a variety of calibration services to fit different accuracy requirements and budgets.

Best	Precision calibration	All sensors can be calibrated over various temperature ranges. Lake Shore has defined calibration ranges available for each sensor type.
Good	Sensors using standard curves	Silicon diodes follow standard curves
		Platinum resistors follow standard curves
		Ruthenium oxide (Rox™) resistors follow standard curves
		GaAlAs diode, Cernox™, and germanium sensors can be purchased uncalibrated, but must be calibrated to accurately read in temperature units

TABLE 2-1 ***Sensor diode sensor calibrations***

2.3.1 Precision Calibration

Calibration is done by comparing a sensor with an unknown temperature response to an accepted standard. Lake Shore temperature standards are traceable to the U.S. National Institute of Standards and Testing (NIST) or the National Physical Laboratory in Great Britain. These standards allow Lake Shore to calibrate sensors from 20 mK to above room temperature. Calibrated sensors are more expensive than uncalibrated sensors of the same type because of the labor, cryogen use, and capital equipment used in the process.

Precision calibration provides the most accurate temperature sensors available from Lake Shore. The Lake Shore Temperature Measurement and Control Catalog has complete accuracy specifications for calibrated sensors.

Calibrated sensors include the measured test data printed and plotted, the coefficients of a Chebychev polynomial that have been fitted to the data, and two tables of data points to be used as interpolation tables. Both interpolation tables are optimized to allow accurate temperature conversion. The smaller table, called a breakpoint interpolation table, is sized to fit into instruments like the 240 Series input module, where it is called a temperature response curve.

It is important to look at instrument specifications before ordering calibrated sensors. A calibrated sensor is required when a sensor does not follow a standard curve and you wish to display in temperature. Otherwise the 240 Series input module will operate in sensor units like ohms or volts. The 240 Series input module may not work over the full temperature range of some sensors.

2.3.2 Sensors Using Standard Curves

Some types of sensors behave in a very predictable manner and a standard temperature response curve can be created for them. Standard curves are a convenient and inexpensive way to get reasonable temperature accuracy. Sensors that have a standard curve are often used when interchangeability is important. Some individual sensors are selected for their ability to match a published standard curve, but in general these sensors do not provide the accuracy of a calibrated sensor.

2.3.3 MeasureLINK™ for the 240 Series

Lake Shore provides MeasureLINK™ for the 240 Series software, which makes loading temperature curves into the 240 Series input module a very simple process. The program configures the module and copies curves from formatted files into the 240 Series input module.

2.4 Sensor Installation

This section highlights some of the important elements of proper sensor installation. For more detailed information, Lake Shore sensors are shipped with installation instructions that cover that specific sensor type and package. The Lake Shore Temperature Measurement and Control Catalog includes an installation section as well. To further help you properly install sensors, Lake Shore offers a line of cryogenic accessories. Many of the materials discussed are available through Lake Shore and can be ordered with sensors or instruments.

2.4.1 Mounting Materials

Choosing appropriate mounting materials is very important in a cryogenic environment. The high vacuum used to insulate cryostats is one consideration. Materials used in these applications should have a low vapor pressure so they do not evaporate or outgas and spoil the vacuum insulation. Metals and ceramics do not have this problem, but greases and varnishes must be checked. Another consideration is the wide extremes in temperature to which most sensors are exposed. The linear expansion coefficient of materials becomes important when temperature changes are so large. Never try to permanently bond materials with linear expansion coefficients that differ by more than three. A flexible mounting scheme should be used or the parts will break apart, potentially damaging them. The thermal expansion or contraction of rigid clamps or holders could crush fragile samples or sensors that do not have the same coefficient. Thermal conductivity is a property of materials that can change with temperature. Do not assume that a thermal anchor grease that works well at room temperature and above will do the same job at low temperatures.

2.4.2 Sensor Location

Finding a good place to mount a sensor in an already crowded cryostat is never easy. There are fewer problems if the entire load and sample holder are at the same temperature. Unfortunately, this not the case in many systems. Temperature gradients (differences in temperature) exist because there is seldom perfect balance between the cooling source and heat sources. Even in a well-controlled system, unwanted heat sources like thermal radiation and heat conducting through mounting structures can cause gradients. For best accuracy, sensors should be positioned near the sample, so that little or no heat flows between the sample and sensor. This may not, however, be the best location for temperature control as discussed in section 2.4.3.

2.4.3 Thermal Conductivity

The ability of heat to flow through a material is called thermal conductivity. Good thermal conductivity is important in any part of a cryogenic system that is intended to be the same temperature. Copper and aluminum are examples of metals that have good thermal conductivity, while stainless steel does not. Non-metallic, electrically-insulating materials like alumina oxide and similar ceramics have good thermal conductivity, while G-10 epoxy-impregnated fiberglass does not. Sensor packages, cooling loads, and sample holders should have good thermal conductivity to reduce temperature gradients. Surprisingly, the connections between thermally conductive mounting surfaces often have very poor thermal conductivity (refer to section 2.4.4 and section 2.4.5).

2.4.4 Contact Area

Thermal contact area greatly affects thermal conduction because a larger area has more opportunity to transfer heat. Even when the size of a sensor package is fixed, thermal contact area can be improved with the use of a gasket material like indium foil and cryogenic grease. A soft gasket material forms into the rough mating surface to increase the area of the two surfaces that are in contact. Good gasket materials are soft, thin, and have good thermal conductivity. They must also withstand the environmental extremes. Indium foil and cryogenic grease are good examples.

2.4.5 Contact Pressure

When sensors are permanently mounted, the solder or epoxy used to hold the sensor act as both gasket and adhesive. Permanent mounting is not a good solution for everyone because it limits flexibility and can potentially damage sensors. Much care should be taken not to overheat or mechanically stress sensor packages. Less permanent mountings require some pressure to hold the sensor to its mounting surface. Pressure greatly improves the action of gasket material to increase thermal conductivity and reduce thermal gradients. A spring clamp is recommended so that different rates of thermal expansion do not increase or decrease pressure with temperature change.

2.4.6 Lead Wire

Different types of sensors come with different types and lengths of electrical leads. In general a significant length of lead wire must be added to the sensor for proper thermal anchoring and connecting to a bulk head connector at the vacuum boundary. The lead wire must be a good electrical conductor, but should not be a good thermal conductor, or heat will transfer down the leads and change the temperature reading of the sensor. Small 30 AWG to 40 AWG wire made of an alloy like phosphor bronze is much better than copper wire. Thin wire insulation is preferred, and twisted wire should be used to reduce the effect of RF noise if it is present. The wire used on the room temperature side of the vacuum boundary is not critical, so copper cable is normally used.

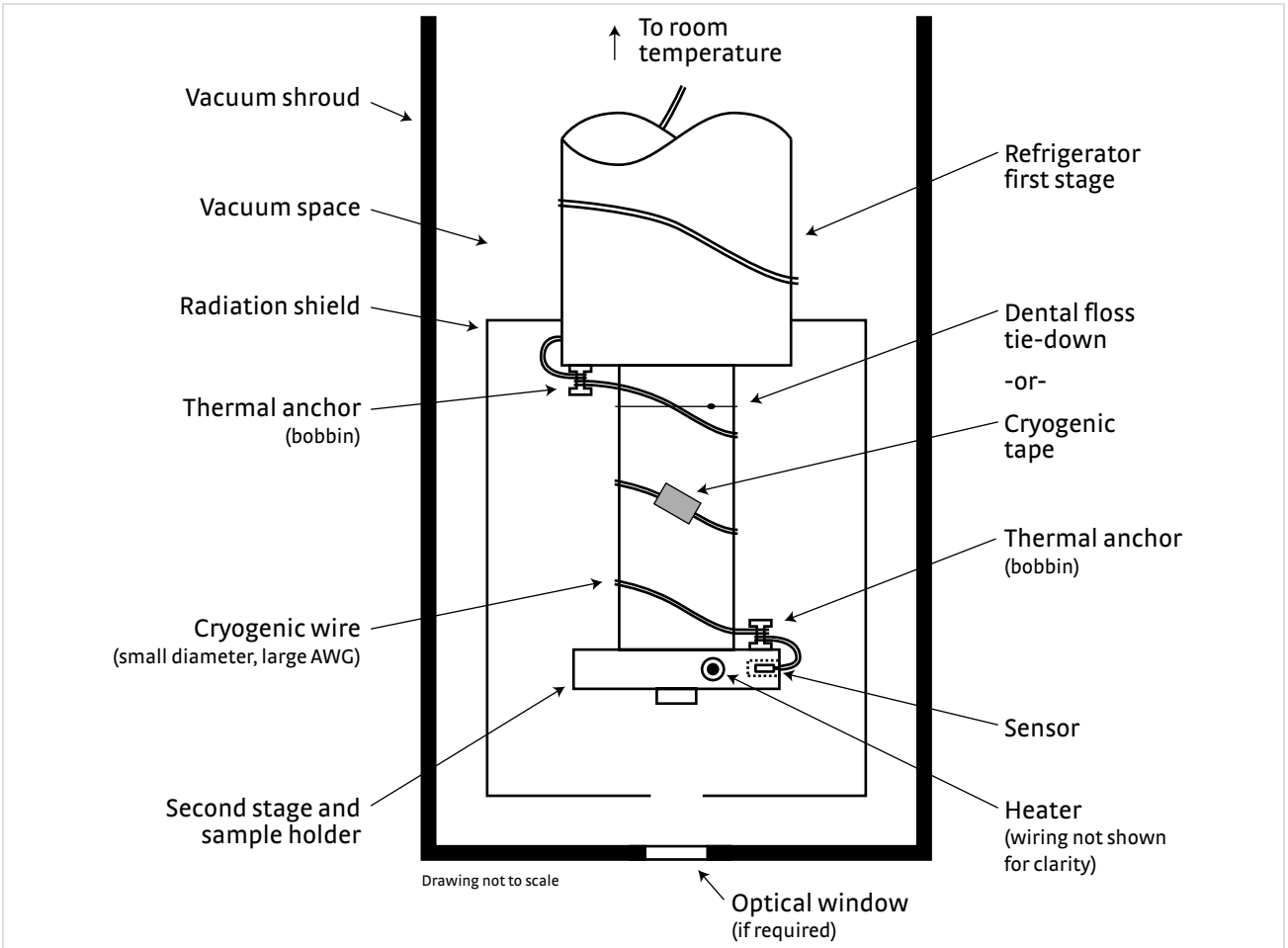

FIGURE 2-1 ***Typical sensor installation in a mechanical refrigerator***

2.4.7 Lead Soldering

When additional wire is soldered to short sensor leads, care must be taken not to overheat the sensor. A thermal anchor such as a metal wire clamp or alligator clip will anchor the leads and protect the sensor. Leads should be tinned before bonding to reduce the time that heat is applied to the sensor lead. Solder flux should be cleaned after soldering to prevent corrosion or outgassing in vacuum.

2.4.8 Thermal Anchoring Leads

Sensor leads can be a significant source of error if they are not properly anchored. Heat will transfer down even small leads and alter the sensor reading. The goal of thermal anchoring is to cool the leads to a temperature as close to the sensor as possible. This can be accomplished by putting a significant length of lead wire in thermal contact with every cooled surface between room temperature and the sensor. Lead wires can be adhered to cold surfaces with varnish over a thin electrical insulator like cigarette paper. They can also be wound onto a bobbin that is firmly attached to the cold surface. Some sensor packages include a thermal anchor bobbin and wrapped lead wires to simplify thermal anchoring.

2.4.9 Thermal Radiation

Thermal (blackbody) radiation is one of the ways heat is transferred. Warm surfaces radiate heat to cold surfaces even through a vacuum. The difference in temperature between the surfaces is one thing that determines how much heat is transferred. Thermal radiation causes thermal gradients and reduces measurement accuracy. Many cooling systems include a radiation shield. The purpose of the shield is to surround the sample stage, sample, and sensor with a surface that is at or near their temperature to minimize radiation. The shield is exposed to the room temperature surface of the vacuum shroud on its outer surface, so some cooling power must be directed to the shield to keep it near the load temperature. If the cooling system does not include an integrated radiation shield (or one cannot be easily made), one alternative is to wrap several layers of super-insulation (aluminized mylar) loosely between the vacuum shroud and load. This reduces radiation transfer to the sample space.

2.5 Consideration for Good Control (if applicable)

Most of the techniques discussed in section 2.4 are designed to improve cryogenic temperature accuracy. There is an obvious exception in sensor location. A compromise is suggested below in section 2.5.3.

2.5.1 Thermal Conductivity

Good thermal conductivity is important in any part of a cryogenic system that is intended to be at the same temperature. Most systems begin with materials that have good conductivity themselves, but as sensors, sample holders, etc., are added to an ever more crowded space, the junctions between parts are often overlooked. In order for control to work well, junctions between the elements of the control loop must be in close thermal contact and have good thermal conductivity. Gasket materials should always be used along with reasonable pressure (section 2.4.4 and section 2.4.5).

2.5.2 Thermal Lag

Poor thermal conductivity causes thermal gradients that reduce accuracy and also cause thermal lag. Thermal lag is the time it takes for a change in heating or cooling power to propagate through the load and get to the feedback sensor. The best way to improve thermal lag is to pay close attention to thermal conductivity both in the parts used and in their junctions.

2.5.3 Two-Sensor Approach

There is a conflict between the best sensor location for measurement accuracy and the best sensor location for control. For measurement accuracy the sensor should be very near the sample being measured, which is away from the heating and cooling sources to reduce heat flow across the sample and thermal gradients. The best control stability is achieved when the feedback sensor is near both the heater and cooling source to reduce thermal lag. If both control stability and measurement accuracy are critical it may be necessary to use two sensors, one for each function.

2.5.4 Thermal Mass

Cryogenic designers understandably want to keep the thermal mass of the load as small as possible so the system can cool quickly and improve cycle time. Small mass can also have the advantage of reduced thermal gradients. Controlling a very small mass is difficult, because there is no buffer to absorb small changes in the system. Without buffering, small disturbances can very quickly create large temperature changes. In some systems it is necessary to add a small amount of thermal mass such as a copper block in order to improve control stability.

2.5.5 System Non-Linearity

While nonlinearities exist in all temperature control systems, they are most evident at cryogenic temperatures. As an example, a thermal mass acts differently at different temperatures. The specific heat of the load material is a major factor in thermal mass. The specific heat of materials like copper change as much as three orders of magnitude when cooled from 100 K to 10 K. Changes in cooling power and sensor sensitivity are also sources of nonlinearity.

The cooling power of most cooling sources also changes with load temperature. This is very important when operating near the highest or lowest temperatures that a system can reach. Nonlinearities within a few degrees of these high and low temperatures make it very difficult to configure them for stable control. If difficulty is encountered, it is recommended to gain experience with the system at temperatures several degrees away from the limit and gradually approach it in small steps.

Carefully monitor temperature sensitivity. Sensitivity not only affects control stability, but it also contributes to the overall control system gain. The large changes in sensitivity that make some sensors so useful may make it necessary to retune the control loop more often.

Chapter 3: Installation

3.1 General

This chapter provides general installation instructions for the 240 Series input module. Please read this entire chapter before installing the instrument and powering it on to ensure the best possible performance and maintain operator safety. For configuration instructions, refer to Chapter 4. For operation instructions, refer to Chapter 5.

3.2 Inspection and Unpacking

Inspect shipping containers for external damage before opening them. Photograph any container that has significant damage before opening it. Inspect all items for both visible and hidden damage that occurred during shipment. If there is visible damage to the contents of the container, contact the shipping company and Lake Shore immediately, preferably within five days of receipt of goods, for instructions on how to file a proper insurance claim. Lake Shore products are insured against damage during shipment, but a timely claim must be filed before Lake Shore will take further action. Procedures vary slightly with shipping companies. Keep all damaged shipping materials and contents until instructed to either return or discard them.

Open the shipping container and keep the container and shipping materials until all contents have been accounted for. Check off each item on the packing list as it is unpacked. Instruments themselves may be shipped as several parts. The items included with the 240 Series input module are listed below. Contact Lake Shore immediately if there is a shortage of parts or accessories. Lake Shore is not responsible for any missing items if they have not been notified within 60 days of shipment.

If the instrument must be returned for recalibration, replacement or repair, a return authorization (RMA) number must be obtained from a Lake Shore representative before it is returned. Refer to section 7.9.3 for the Lake Shore RMA procedure.

3.2.1 Packing List

240 Series input modules contain only the connectors required for that specific module, listed below.

The Model 240 accessory kit (240-ACC-KIT) contains items needed for configuration of one or more 240 modules, and should be ordered only once per project. The Model 240 evaluation kit (240-EVAL-KIT) contains accessories needed to evaluate 240 Series functionality. For further information on these kits, see section 6.3.

Part	Model 240-2P	Model 240-8P	240-ACC-KIT	240-EVAL-KIT
2-input module	1	--	--	1
8-input module	--	1	--	1
5-pin sensor connector	2	8	4	14
4-pin power and communication connector	1	1	2	4
DIN rail backplane connector	1	1	2	4
DIN rail backplane connector (pass through)	--	3	3	6
Model 240 user's manual	--	--	1	1
Model 240 quick start guide	--	--	1	1
USB cable	--	--	1	1
Flash drive with product software	--	--	1	1
Screwdriver	--	--	1	1
Simulated sensor	--	--	--	1
Fixed resistor board	--	--	--	10
24V power supply	--	--	--	1

TABLE 3-1 ***240 Series packing list***

3.3 Physical Installation

The 240 Series input module has been specifically designed to mount on a DIN rail. To minimize shock hazard, the instrument is equipped with a grounded connection to the DIN rail. Mount the input module vertically, and connect the DIN rail to an electrical ground. If the input module is mounted in an equipment rack or enclosure, ensure that the ambient temperature does not exceed the instrument rating.

CAUTION

Mount the input module so that it is protected from liquids that can enter the enclosure.

NOTE

For best noise and accuracy performance, install the input module in a grounded metallic enclosure.

3.4 Power Connections and PROFIBUS-DP Interface

The combination power and communication connector is a 4-pin terminal connector.

3.4.1 Power

The typical power supply is 24 VDC, but can range from 21.6 VDC to 26.4 VDC. The power supply should be capable of supplying at least 100 mA per module.

3.4.2 Configure the USB/PC Connection

The 240 Series input module is fully-configurable through direct USB connection. See Chapter 4 for more details about this process.

NOTE

After configuring the USB, disconnect it from the computer before beginning PLC communication.



FIGURE 3-1 ***USB/PC connection***

3.4.3 RS-485/PROFIBUS Interface

The RS-485/PROFIBUS-DP communication integrates with distributed PLC-based control architectures.



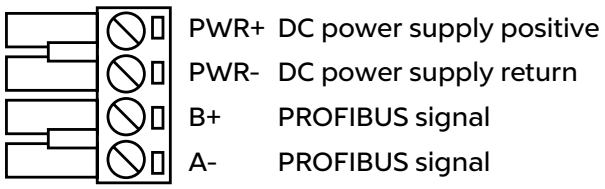

FIGURE 3-2 ***Power connections***

3.4.3.1 Cable Preparation (4-pin)

The cable for the power and communications connector (4-pin) should be prepared as follows:

1. Strip the inserted wires back 7 mm.

NOTE

7 mm is recommended because a long strip length can cause external shorts, and a short strip length can be easily pulled out or make poor connections.

2. If ferrules are used, the length of the barrel should be the same as the wire strip length.

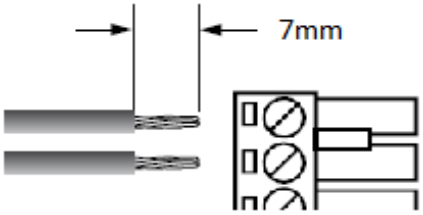

- Do not tin the wires. Tinned wires can become loose over time.
- The tightening torque should be between 0.5 and 0.6 Nm.
- The screw thread is M3.
- The suggested wire size is between 12 AWG and 24 AWG.
- The conductor cross section for solid wire, stranded wire, or ferrules is minimum of 0.25 mm^2 and a maximum of 2.5 mm^2.

3.4.4 Backplane

Power and RS-485 connections may be shared between modules by using the optional backplane connectors supplied with the module. Up to 20 modules can be chained together to share power. Use caution when chaining together RS-485 communication connectors; the maximum amount of connectors for RS-485 communication depends on your configuration.



FIGURE 3-3 ***Backplane connectors***

3.4.5 Power and RS-485 Connections

Typically, the power and RS-485 connections are made through the power and communication connector (4-pin terminal connector), as shown in the figure below.

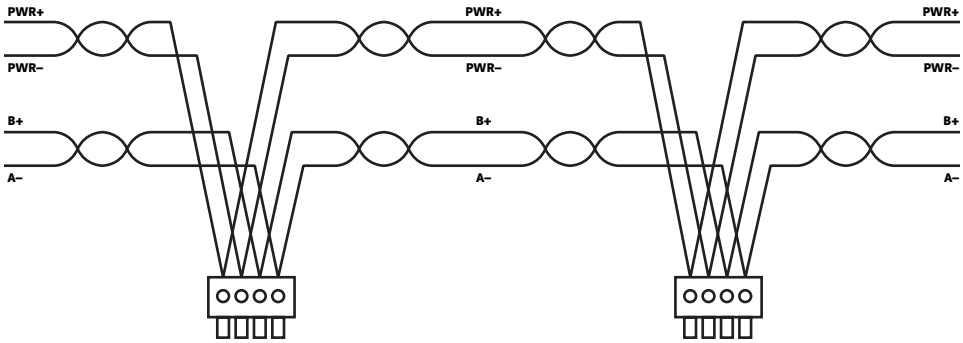

FIGURE 3-4 ***Power connection***

Alternatively, the power and RS-485 can be connected to the modules through the backplane. The signals on the 4-pin terminal connector are directly connected to the backplane connector, so only one connection should be used. If the backplane connectors are used to connect the RS-485 signals, the connections should be made as shown below.

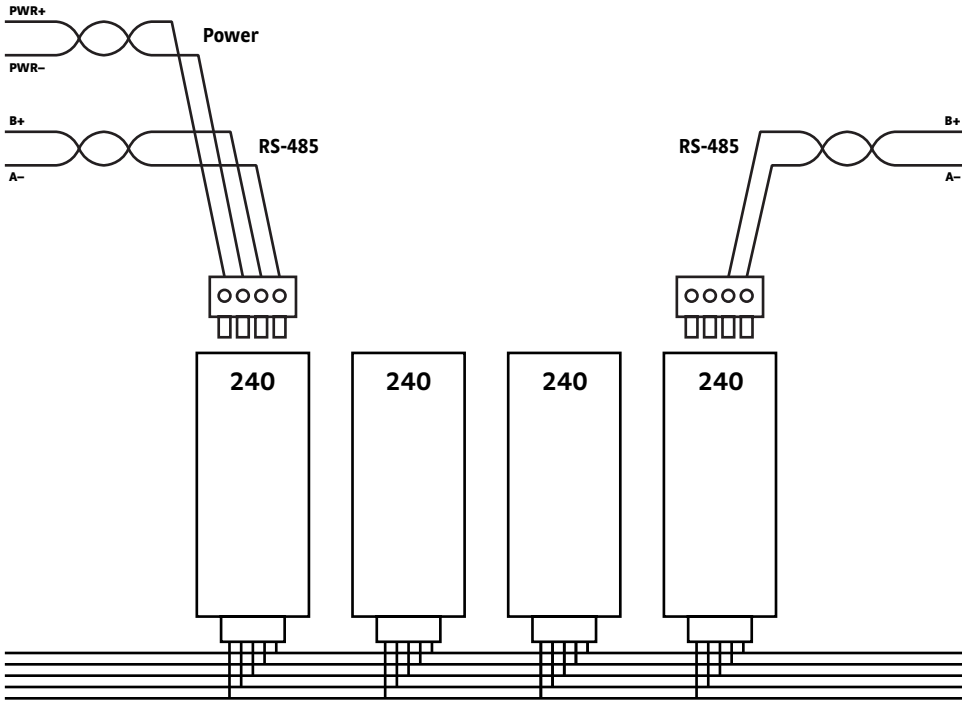

FIGURE 3-5 ***Backplane power connection***

Certified PROFIBUS connections require 1 m of cable between each slave module, because of potential conflicts due to reflections. Using the backplane is not recommended for PROFIBUS connections.

3.4.6 RS-485 Grounding and Shielding

RS-485 cable shields should be connected as shown below. The integrity of the cable shield should be made so the cable shield is continuously connected along the entire cable length. If the backplane is used, the cable shield should be connected between the input cable and output cables. The module has a shield connection tied directly to the DIN rail; so individual modules do not need to be connected to the cable shield. The cable shield and the DIN rail shield should be solidly connected to each other and to Earth ground near the modules.

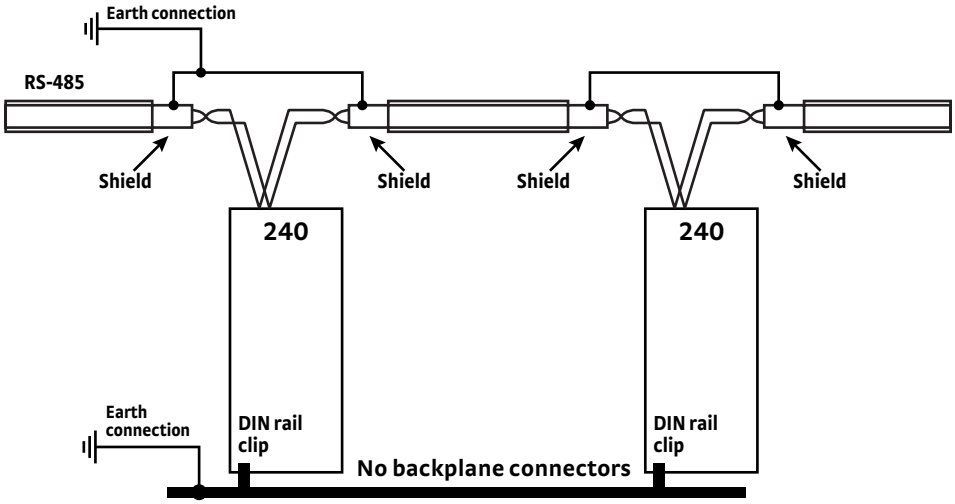

FIGURE 3-6 ***Grounding and shielding with no backplane connector***

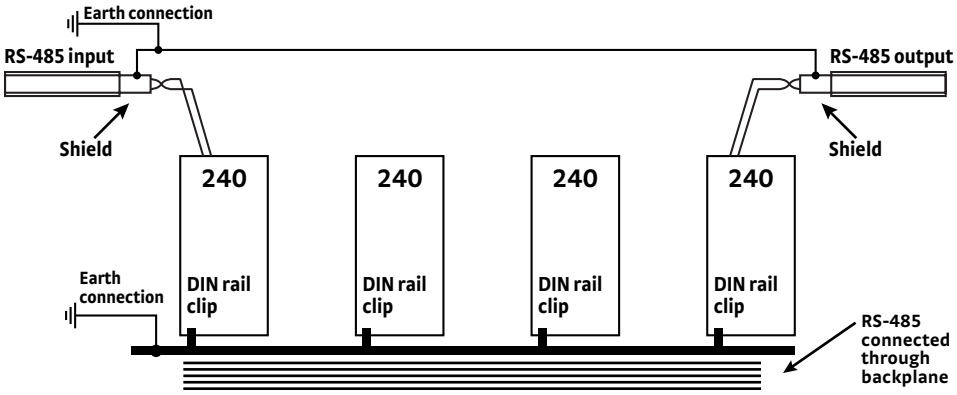

FIGURE 3-7 ***Grounding and shielding with backplane connector***

3.4.7 RS-485 Termination

Bus termination reduces interference caused by signal reflections. Resistor termination is required at the beginning and end of the RS-485 bus segment.

NOTE

Several options are available for PROFIBUS-specific terminating resistors. Lake Shore has successfully tested the module with several different termination methods. Phoenix's PSI-Terminator-PB-TBUS may be a convenient way to connect the power and PROFIBUS cabling to meet the applicable PROFIBUS requirements, especially when the modules are first or last on the PROFIBUS segment.

3.5 Diode/Resistor Sensor Inputs

This section details how to connect diode and resistor sensors to the inputs. Refer to section 4.2 to configure the inputs.

3.5.1 Sensor Input Connector and Pin Out

The input connectors are 5-pin terminal plug connectors. The sensor connector pins are defined below.

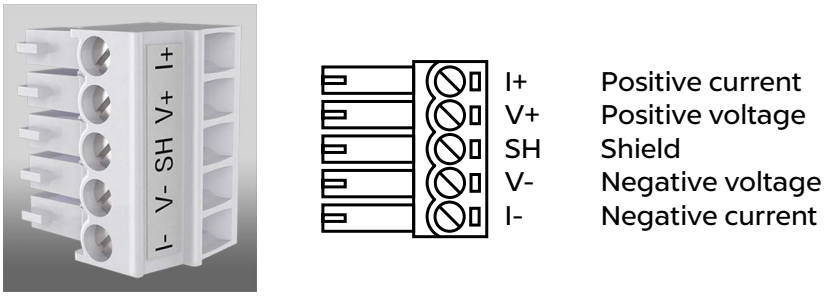

FIGURE 3-8 ***5-pin terminal plug connector***

Pin	Symbol	Description
1	I–	–Current
2	V–	–Voltage
3	None	Shield
4	V+	+Voltage
5	I+	+Current

TABLE 3-2 ***Diode/resistor input connector details***

NOTE **Make sure to properly seat connectors. When removing a sensor, use a screwdriver to gently remove the connector.**

3.5.1.2 Cable Preparation (5-pin)

The cable for the power and communications connector (5-pin) should be prepared as follows:

1. Strip the inserted wires back 7 mm.

NOTE **7 mm is recommended because a long strip length can cause external shorts, and a short strip length can be easily pulled out or make poor connections.**

2. If ferrules are used, the length of the barrel should be the same as the wire strip length.

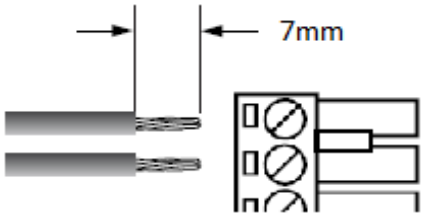

- Do not tin the wires. Tinned wires can become loose over time.
- The tightening torque should be between 0.22 and 0.25 Nm.
- The screw thread is M2, slot head.
- The suggested wire size is between 16 AWG and 28 AWG.
- The conductor cross section for solid wire, stranded wire, or ferrules is minimum of 0.14 mm^2 and a maximum of 1.5 mm^2.
- If two conductors are inserted, the wire sizes should be equivalent.

3.5.2 Input Configuration

The diagram below illustrates the features of the 240 Series input modules. The location of each input is listed on the front of the module.

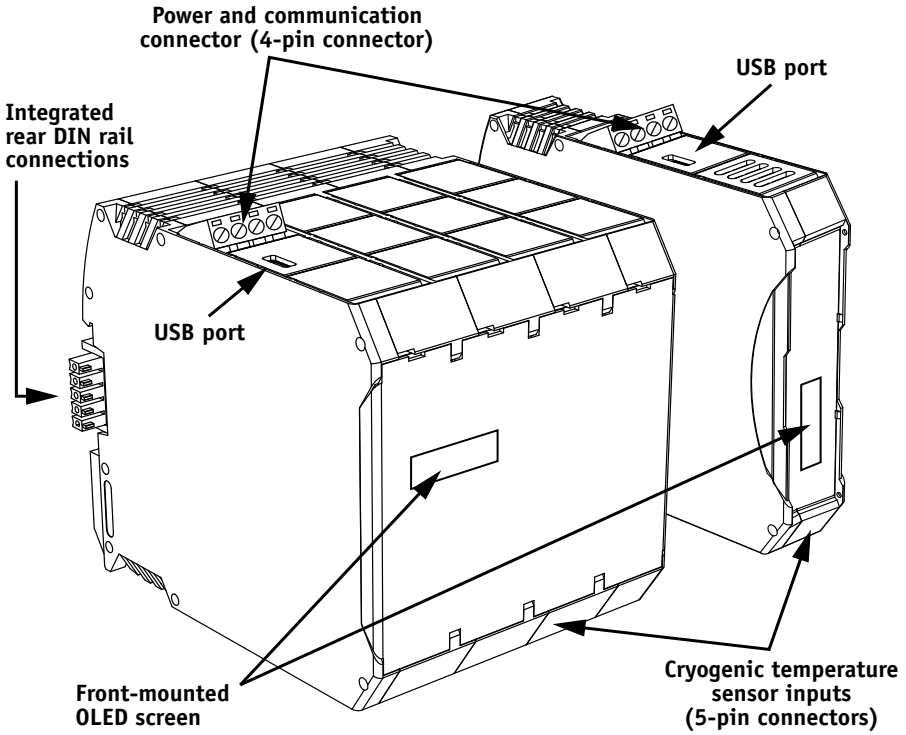

FIGURE 3-9 ***Model 240 Series input module***

3.5.3 Sensor Lead Cable

The sensor lead cable used outside the cooling system can be much different from what is used inside. Generally, heat leak is not a concern. In this case, cabling should be chosen to minimize error and noise pick up. Larger conductor, 22 AWG to 28 AWG stranded copper wire is recommended because it has low resistance yet remains flexible when several wires are bundled in a cable. The arrangement of wires in a cable is also important.

For best results, voltage leads (V+ and V-) and current leads (I+ and I-) should be twisted together. The twisted pairs of voltage and current leads should then be covered with a braided or foil shield that is connected to the shield pin of the instrument. This type of cable is available through local electronics suppliers. Instrument specifications are given assuming 3 m (10 ft) of sensor cable. Longer cables can be used, but environmental conditions may degrade accuracy and noise specifications.

NOTE

Lake Shore has successfully tested the module with 300 m (1000 feet) of shielded twisted cable. The best cable to use for longer runs is shielded CAT6 cable with polypropylene insulation. PVC insulation should be avoided to maintain measurement accuracy.

Refer to section 2.4.6 for information about wiring inside the cryostat.

3.5.4 Grounding and Shielding Sensor Leads

The sensor inputs are isolated from earth ground to reduce the amount of earth ground referenced noise that is present on the measurement leads. Connecting sensor leads to earth ground on the chassis of the instrument or in the cooling system will defeat that isolation. Grounding leads on more than one sensor prevents the sensor excitation current sources from operating.

Shielding the input sensor cable is important to keep external noise from entering the measurement. A shield is most effective when it is near the measurement potential so the 240 Series input module offers a shield at measurement common. The shield of the sensor cable should be connected to the shield pin of the input connector. The shields should not be connected to earth ground near the module. One shield should be connected to the cryostat's ground as long as it is near earth ground. Connecting at more than one point will cause a ground loop, which adds noise to the measurement.

3.5.5 Sensor Polarity

Lake Shore sensors are included with instructions that indicate lead current and polarity. It is important to follow these instructions for plus and minus leads (polarity) as well as voltage and current when applicable. Diode sensors do not operate in the wrong polarity. They look like an open circuit to the instrument. 2-lead resistors can operate with any lead arrangement. 4-lead resistors can be more dependent on lead arrangement. Follow any specified lead assignment for 4-lead resistors. Mixing leads could give a reading that appears correct but is not the most accurate.

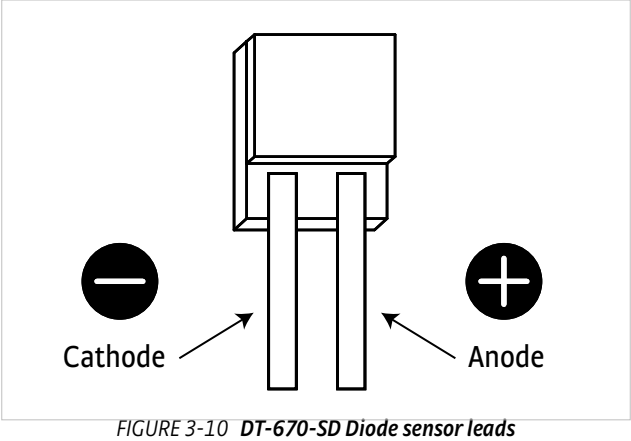

FIGURE 3-10 ***DT-670-SD Diode sensor leads***

3.5.6 Four-Lead Sensor Measurement

All sensors, including both 2-lead and 4-lead can be measured with a 4-lead technique. The purpose of a 4-lead measurement is to eliminate the effect of lead resistance on the measurement. If it is not taken out, lead resistance is a direct error when measuring a sensor.

In a 4-lead measurement, current leads and voltage leads are run separately up to the sensor. With separate leads there is little current in the voltage leads, so their resistance does not enter into the measurement. Resistance in the current leads will not change the measurement as long as the voltage compliance of the current source is not reached. When 2-lead sensors are used in 4-lead measurements, the short leads on the sensor have an insignificant resistance.

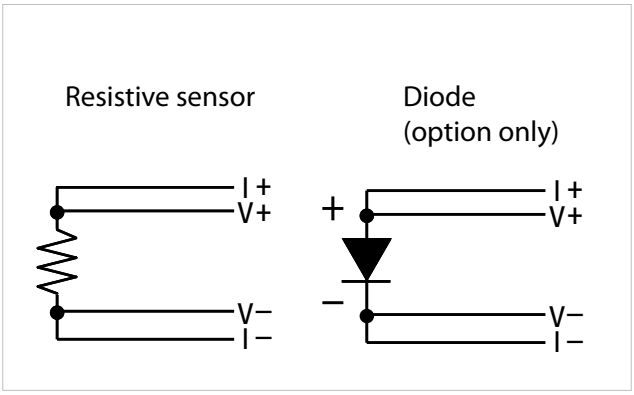

FIGURE 3-11 ***4-lead measurement***

3.5.7 Two-Lead Sensor Measurement

There are times when crowding in a cryogenic system forces users to read sensors in a 2-lead configuration because there are not enough feedthroughs or room for lead wires. If this is the case, positive voltage to positive current and negative voltage to negative current leads are attached at the back of the instrument or at the vacuum feedthrough.

The error in a resistive measurement is the resistance of the lead wire run with current and voltage together. If the leads contribute 2) or 3) to a 10 k) reading, the error can probably be tolerated. When measuring voltage for diode sensors, the error in voltage can be calculated as the lead resistance times the current, typically 10 µA.

For example: a 10) lead resistance times 10 µA results in a 0.1 mV error in voltage. Given the sensitivity of a silicon diode at 4.2 K, the error in temperature would be only 3 mK. At 77 K the sensitivity of a silicon diode is lower so the error would be close to 50 mK. Again, this may not be a problem for every user.

Connectors are also a big source of error when making 2-lead measurements. Connector contact resistance is unpredictable and changes with time and temperature. Minimize interconnections when making 2-lead measurements. Refer to FIGURE 3-12 for an image of a 2-lead sensor measurement.

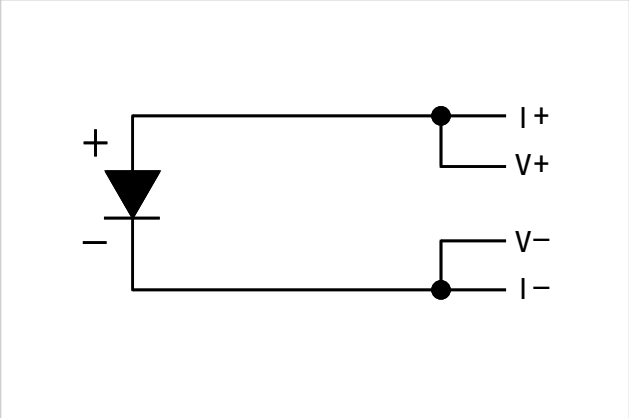

FIGURE 3-12 ***2-lead sensor measurement***

3.5.8 Lowering Measurement Noise

Good instrument hardware setup technique is one of the least expensive ways to reduce measurement noise. The suggestions fall into two categories: (1) do not let noise from the outside enter into the measurement, and (2) let the instrument isolation and other hardware features work to their best advantage. Here are some further suggestions:

- Use 4-lead measurement whenever possible
- Do not connect sensor leads to chassis or earth ground
- Use twisted shielded cable outside the cooling system
- Attach the shield pin on the input sensor connector to the cable shield
- Attach the cable shield to earth ground near the sensor
- Do not attach more than one cable shield at the other end of the cable
- Run different inputs and outputs in their own shielded cable
- Use twisted wire inside the cooling system
- Consider ground strapping the instrument chassis (DIN rail) to other instruments or computers

Chapter 4: Configuration

4.1 General

This chapter provides instructions for the configuration of the 240 Series input module. Operation instructions are in Chapter 5.



FIGURE 4-1 ***Model 240-2P and Model 240-8P front panels***

4.2 Configuration

4.2.1 Physical Connection

The 240 Series input module must be configured via a USB to PC connection. If you do not have one already, a micro-USB cable is included in the optional 240 Series accessory kit (240-ACC-KIT), which must be purchased separately.

NOTE

The 240 Series input module cannot be configured over the USB connection while communicating via PROFIBUS.

4.2.2 Configuration Tools

The following software tools are available to assist in configuration of the 240 Series input module:

- MeasureLINK™ for the 240 Series—software used to configure all settings on the 240 Series input module. This program runs on the .NET framework and does not require administrator privileges to install onto a PC. Compatible with Windows 7, 8, and 10.
- Curve Handler™—Allows the creation and modification of sensor temperature curves. This program is not required if you are using Lake Shore sensors with a standard curve, or one of the highly-accurate Lake Shore sensor calibrations.

These programs are available as free downloads from the Lake Shore website: https://www.lakeshore.com/software/.

4.3 Programming Using MeasureLINK™ for the 240 Series

The MeasureLINK™ for the 240 Series acts as a virtual user interface for the 240 Series input module. It communicates with one Model 240 module at a time, and no data is stored on the PC once the module is disconnected. In most cases, commands and configurations are applied to the Model 240 instantly, and settings are saved to the 240 Series input module's internal memory. Once configuration is complete, it is safe to disconnect the 240 Series input module.

NOTE

Text entry fields can be applied to the unit by clicking outside the text field, or by pressing Enter on your keyboard.

4.3.1 Connecting to MeasureLINK™

1. Connect a power adapter to the 240 Series input module.
2. Connect the USB connector to the PC using a USB cable.
3. Install and run the MeasureLINK™ for the 240 Series.
4. Select the 240 Series input module from the drop down menu and click **Connect.**

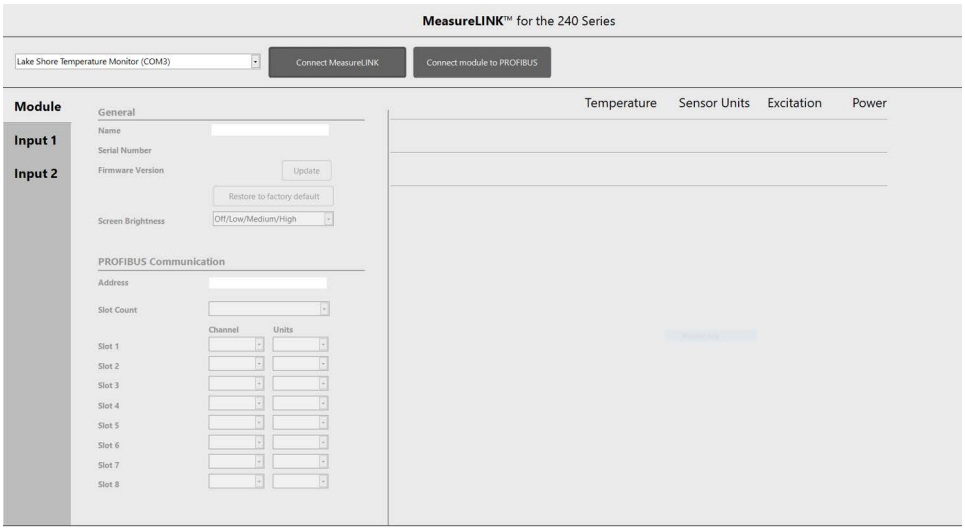

FIGURE 4-2 ***MeasureLINK™ for the 240 Series***

NOTE

If you do not see "Lake Shore Temperature Monitor" listed in the drop down menu, the USB driver may need to be manually installed. The USB driver can be downloaded from https://www.lakeshore.com/software/**. Please see section 5.3 for more information.**

4.3.2 MeasureLINK™ for the 240 Series Interface Overview

The MeasureLINK™ for the 240 Series interface contains three areas:

1. The navigation pane occupies the left side of the screen. This area is used to change views between the inputs, and to change system-level settings for the 240 Series input module.
5. The settings area is located in the center column of the screen.
6. The readings pane is located on the right of the screen. This area provides real-time readings for all inputs in the module.

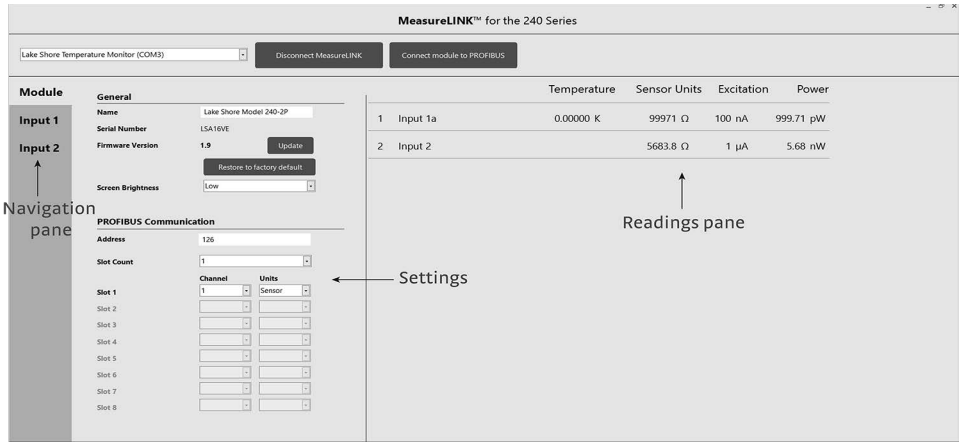

FIGURE 4-3 ***The MeasureLINK™ for the 240 Series interface***

4.3.3 Module Settings

System-level settings for the 240 Series input module are set on the Module Settings screen.

4.3.3.1 Module Settings

Setting	Description	Notes
Name	A user-configurable model name for the module.	Optional parameter.
Serial Number	Identifies the serial number of the module.	Read from the module. Cannot be modified.
Firmware Version	Identifies the firmware version of the module.	Read from module.
Update firmware	Allows the user to upgrade the module firmware.	The latest firmware update is available as a free download from Lake Shore website: https://www.lakeshore.com/software. Download, save, and extract the latest firmware update to your PC (.ifw file). From MeasureLINK™ update the firmware version by locating and opening the .ifw file on your PC. This may take up to a minute to complete.
Restore to factory default	Resets the module to default values.	Restore to factory default also removes temperature curve data stored on the module.
Screen Brightness	Sets the brightness of the modules screen.	Setting a lower screen brightness will increase the life of the screen. NOTE: Screen brightness is not covered by the Lake Shore warranty.
PROFIBUS settings	For communication settings, please see section 4.3.3.2.	

TABLE 4-1 ***Module settings***

4.3.3.2 Communication Settings

The 240 Series input module has been implemented as a modular station for the PROFIBUS interface. This allows the same GSD file to be used for the Model 240-2P (2 inputs) and the Model 240-8P (8 inputs). As a modular station, the number of readings being sent back over the PROFIBUS interface is configurable. The 240 Series input module can send between one and eight slots of data, each slot containing a sensor reading.

Setting	Description	Notes
PROFIBUS Address	Sets the address used for PROFIBUS-DP communications.	Valid address range: 1 – 126 Addresses must be unique between modules on the same network.
PROFIBUS Slot Count	Number of readings to be sent to the PLC.	Valid settings: 1 – 8
Channel	Selects which input to tie to each PROFIBUS slot.	For more information, see section 5.2.
Units	Selects which units to communicate the measurement value in.	For more information, see section 5.2.

TABLE 4-2 ***Communication settings***

To configure the 240 Series input module:

1. Choose the desired number of readings to be returned over the PROFIBUS using the Slot Count field. It is recommended to send back only the needed readings to minimize bus traffic.
3. For each slot, set a reading Channel and Units (sensor, Kelvin, Celsius, Fahrenheit). The units being sent over PROFIBUS can be different than the reporting units for the display. The slots can be configured in any way (channels do not need to be in order, different units of the same channel can be sent simultaneously).
4. Configure the PLC to match how each module is configured.

4.3.4 Input Settings

Configuration options available for each input are listed below. When configuring the 240 Series input module in MeasureLINK™ for the 240 Series, it is best to start at the top of the screen to configure settings.

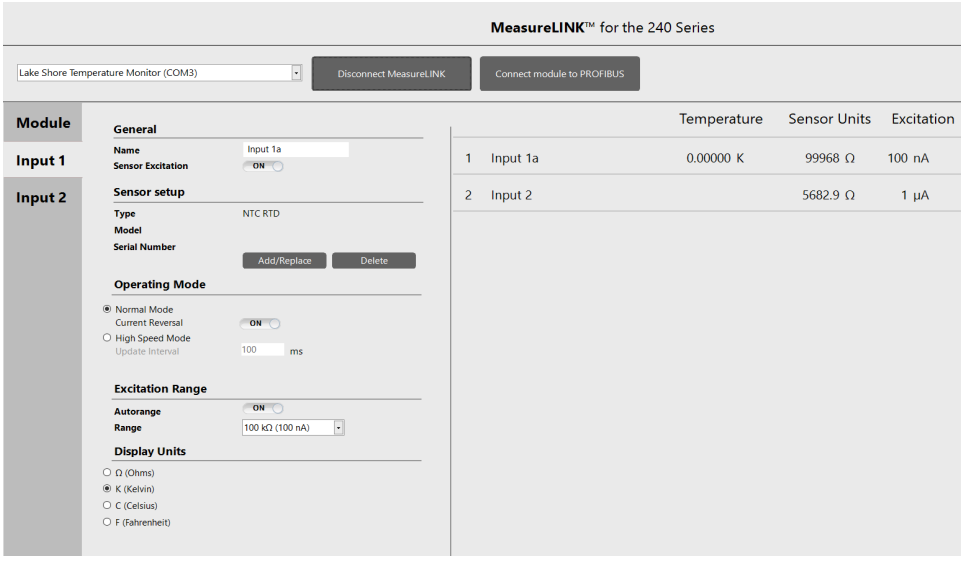

FIGURE 4-4 ***The Input settings screen***

4.3.4.1 General Settings

Setting	Description	Notes
Name	User-editable field used to identify the point being measured by the sensor	Optional parameter. Not included in PROFIBUS communications
Sensor Excitation	Enables or disables the current being provided to the sensor	Useful for temporarily shutting down an input without deleting the curve that is stored for that input.

TABLE 4-3 ***Input settings***

4.3.4.2 Sensor Setup

The 240 Series input module supports the following sensors:

Sensor type	Input range	Excitation	Curve format	Example sensors
Resistive—Negative Temperature Coefficient (NTC)	0 to 100 k)	100 nA to 1 mA (Autoranging to minimize self-heating)	Log_{10}())/K	Cernox™, Rox™, Germanium, Carbon-Glass
Resistive—Positive Temperature Coefficient (PTC)	0 to 1 k)	1 mA (fixed)	)/K	Platinum, Rhodium-Iron
Diode	0 to 7.5 V	10µA (fixed)	V/K	DT Series (Silicon Diodes), TG Series (GaAlAs Diodes)

TABLE 4-4 ***Sensor types***

Temperature values are calculated internally using conversion tables known as temperature curves. The most accurate temperature readings will be obtained by using calibrated sensors. However, some sensors (such as the Lake Shore DT Series diodes) follow a standard curve that supports a large number of sensors. Follow the steps below to configure these options in MeasureLINK™ for the 240 Series.

4.3.4.2.1 Calibrated Sensor

To configure a calibrated sensor:

1. Click the **Add/Replace** button.
2. Click the **Browse...** button.
3. Navigate to the *.340 file that contains the calibration curve of the sensor that is connected to that input.
4. Select the file.
5. The temperature curve may take a few minutes to load. The process is complete when the fields on the screen display sensor information.

4.3.4.2.2 Standard Curve Sensor

To configure a standard curve sensor:

1. Click the **Add/Replace** button.
2. From the drop down list in the pop-up window, select the curve that matches the connected sensor.

Curve designator	Associated sensor	Temperature range
LSCI DT-400	Lake Shore Cryotronics DT-400 diodes	1.4 to 475 K
LSCI DT-600	Lake Shore Cryotronics DT-600 diodes	1.4 to 500 K
LSCI PT-100	Lake Shore Cryotronics PT-100 diodes	28 to 810 K
IEC P100 RTD	100) Platinum RTDs complying with IEC 60751	73.15 to 1123.15 K (-200 to 850 °C)
IEC P1000 RTD	1000) platinum RTDs complying with IEC 60751	73.15 to 273.15 K (-200 to 0 °C)
Simulated Sensor-NTC	Simulated sensor and fixed resistor board from the evaluation kit (240-EVAL-KIT)	1 to 480 K

TABLE 4-5 ***Standard curve sensor settings***

4.3.4.2.3 No Temperature Curve

This option does not include temperature conversion, and reports in sensor units (V/)) only.

1. Click the **Add/Replace** button.
2. From the No Curve drop down list in the pop-up window, select the Sensor Type that matches the connected sensor.

4.3.4.3 Operating Mode

The 240 Series input module can be configured to operate differently for different applications.

1. *Normal Mode Current Reversal:* Applies filtering to the measurement signal to improve the resolution of the readings. The filter averages readings over 100 ms. Current reversal is available in this mode.
2. *Current Reversal:* Improves accuracy by removing any thermal EMF offsets that may be present. Disabling current reversal may be necessary when multiple sensors are in close proximity, and the current reversal causes interference between the sensors.



Current reversal is not available in High speed mode or when measuring diode sensors.

3. *High speed mode:* Updates readings up to every 1 ms. In order to achieve this update rate, current reversal is not available in this mode. Due to the reduced filtering in this mode, measurement resolution and accuracy will not be as good as when in High Accuracy mode.

   To achieve the best possible performance, the reading rate of the PLC should match the module's update rate. MeasureLINK™ for the 240 Series allows the user to set the update rate to 1 ms or 100 ms. If the PLC can only read at a rate between these two update rates, it is suggested that the FILTER command be used to set the filtering to match the modules update rate to the PLC's capabilities, thus maximizing the performance of the module.



High speed mode is not available on the 8-input version of the 240 Series input module.

4.3.4.4 Display Units

The 240 Series input module has an integrated front screen that displays two input readings. The units that are displayed are set by selecting the appropriate radio button in the Display units section of the screen. This selection will also determine the temperature value displayed in the readings pane of MeasureLINK™ for the 240 Series.

For the selection of one of the temperature units (Kelvin, °Celsius, °Fahrenheit) to be valid, a temperature conversion curve must be assigned to the input. Selecting one of the temperature units is not valid when **No Curve** is selected in Sensor setup.

Selecting **Sensor units** will cause the module to report in ohms ()) or kilohms (k)) for resistive sensors, and volts (V) for diodes.



This setting does not configure the units used for PROFIBUS-DP communication. PROFIBUS settings are listed on the Module Settings screen (section 4.3.3).

4.3.5 Readings Pane and 240 Series Front Display

The current status of the measurement inputs can be seen in two different locations:

- 240 Series input module front OLED display: shows two readings based on the display units. Whether these readings are dedicated or cycling depends on the number of inputs in the module.
- MeasureLINK™ for the 240 Series Readings pane: displays sensor units and temperature values (when appropriate) for all enabled inputs in a single module.

4.3.5.1 Temperature Values

Temperature values are displayed when an input has a temperature value selected as the display units. If Sensor units is selected as the display units, the temperature reading will be displayed in the MeasureLINK™ for the 240 Series Readings pane.

To generate a valid temperature value, an input must either be assigned one of the standard temperature curves, or loaded with a custom calibration curve. If the measured sensor units fall outside the range covered by the associated temperature curve, the following error messages will be displayed:

Error code	For negative temperature coefficient sensors:	For positive temperature coefficient sensors:
T.Under (input is at or under the low end of the curve)	Sensor units are greater than the value associated with the lowest temperature value in the temperature curve	Sensor units are lower than the value associated with the lowest temperature value in the temperature curve
T.Over (input is at or over the high end of the curve)	Sensor units are lower than the value associated with the highest temperature value in the temperature curve	Sensor units are greater than the value associated with the highest temperature value in the temperature curve

TABLE 4-6 ***Temperature values***

4.3.5.2 Sensor Values

The sensor value (ohms or volts) is displayed for each enabled input. This helps verification of sensor readings by comparing the calculated temperature with the measured resistance or voltage of the sensor.

Error code	For negative temperature coefficient resistive sensors:	For positive temperature coefficient sensors:	For diode sensors:
S.Under (input is at or under the negative full-scale sensor units)	Resistance ≤ -100 k) (NOTE: Negative numbers occur when wiring is incorrect)	Resistance ≤ -1 k)	Voltage ≤ -7.5 V
S.Over (input is at or over full-scale sensor units)	Resistance ≥ +100 k) (when autoranging)	Resistance ≥ +1k)	Voltage ≥ -7.5 V

TABLE 4-7 ***Temperature values***

4.3.5.3 Excitation Values and Power Dissipation

Excitation values are selected automatically, based on the connected sensor and value. The excitation value being used at any given time can be seen in the readings pane. Based on this reading and the measured sensor value, power dissipation is also calculated and displayed.

4.3.5.4 Display Brightness

The 240 Series input module uses a bright, high-resolution OLED screen to monitor the temperature on the front of the module. OLED technology has dramatically improved over the years, and the corresponding lifetime has steadily increased to thousands of hours. To increase the screen life, turn the screen off or lower the brightness when not needed for extended periods of time.

4.3.6 Evaluation Kit (optional)

The evaluation kit includes two unique accessories for the 240 Series input module that will help simulate a live sensor connection if one is not readily available for your evaluation testing.

Sensor simulator: A box containing a trimpot (variable resistor) that is similar to the Cernox temperature range, to be used as a rough approximation of these sensors. This product can be useful if you'd like to see how the 240 Series input module handles communicating and displaying a particular temperature range, or if you'd like to see how the 240 Series input module autoranges. Follow these steps to use the sensor simulator:

1. Connect the sensor simulator to the desired input of the 240 Series input module using the pluggable connector.
2. In MeasureLINK™ for the 240 Series, choose the correct input.
3. Under Sensor setup, select Standard Curve and pick Sensor Simulator – NTC from the drop down list.
4. Make any other changes to the input configuration needed for your application, and then disconnect from MeasureLINK™ for the 240 Series.
5. Adjust the dial to change the temperature to coincide with the markings on the sensor simulator box.



The accuracy rating of the trimpot is 10%, so the measured resistance and temperature value may not align exactly with the markings on the dial. Please do not use the sensor simulator as a method for verifying accuracy of the 240 Series input module.

Fixed resistor board: A small PCB containing two different fixed resistors that correspond with an arbitrary Cernox sensor at approximately 1.8 K and a 100 Ω platinum sensor at approximately 65 K. The evaluation kit contains enough of these boards for both the 2 and 8 input modules included in the kit so that valid readings can be easily obtained on all inputs. Follow these steps to use the fixed resistor board:

1. Insert one of the fixed resistor boards into one of the 5-pin sensor input connectors provided with the 240 Series input module. Locate the board so that the switch is on the same side as the screw heads on the terminal connector.
2. Screw down the terminal connections so that the terminals contact the metal traces on the fingers of the fixed resistor board.



The fingers can be fragile. Please handle the assembled set by the terminal connector when connecting and disconnecting to the 240 Series input module.

3. Plug the terminal connector into the desired input of the 240 Series input module. The switch should face toward the front of the module.
4. In MeasureLINK™ for the 240 Series, choose the correct input.
5. Under Sensor Setup, select the sensor you wish to simulate from the drop down list under Standard Curve:
   - For Cernox reading 1.8K, choose Sensor Simulator – NTC.
   - For Platinum reading 65 K, choose LSCI PT-100.
6. Make any other changes to the input configuration needed for your application, and then disconnect from MeasureLINK™ for the 240 Series.
7. Set the switch on the fixed resistor board to CERNOX if you loaded the Sensor Simulator – NTC temperature curve. Set the switch to PLATINUM if you selected the LSCI PT-100 curve instead.



If the switch is set to PLATINUM when the Sensor Simulator – NTC temperature curve is loaded, the temperature displayed will be approximately 400 K. If the switch is set to CERNOX when the LSCI PT-100 temperature curve is loaded, the input module will report an S.Over error since the resistance value is greater than the 1 kΩ limit for a PTC sensor.

Chapter 5: Operation

5.1 General

This chapter provides operational instructions for the RS-485 and USB serial interfaces for the 240 Series input module. The 240 modules are designed to interface directly with a PLC or SBC via RS-485 to transmit temperature readings using either the PROFIBUS-DP, Modbus RTU, or Lake Shore ASCII serial modes. Lake Shore ASCII serial mode is the only protocol available via the USB interface for setup, maintenance and local operations with a PC and MeasureLINK™ software.

The Model 240 is shipped configured for PROFIBUS protocol by default (see section 5.2). For details on selecting Lake Shore ASCII serial via RS-485 mode, see section 5.2.4. Lake Shore serial communications is described in section 5.3. The USB interface described is intended to be used with the included MeasureLINK software to set up and configure the module before operation.



The USB interface cannot be used to change the module settings while the PROFIBUS interface is active.

5.2 PROFIBUS-DP

The 240 Series input module is configured to communicate as a PROFIBUS-DP (decentralized peripheral) device. The PROFIBUS interface consists of a master device, usually a PLC, and a number of slave devices (peripherals). PROFIBUS-DP normally operates in a cyclic data exchange format. The master will periodically poll each slave on the network. The data exchange will be initiated by the master with a communications telegram to the slave, containing any output settings the device needs. The slave device then responds with any input readings that it has. Not all devices have both outputs and inputs, so for an instrument like the 240 Series input module that only has inputs, the master will send a communication telegram that just requests readings.

Some of the PROFIBUS settings need to be configured using the MeasureLINK™ for the 240 Series software before connecting the device to the PROFIBUS network. These settings include the PROFIBUS address, the number of readings returned, and which readings are returned. See section 4.3.3 for details on these settings.

The PROFIBUS interface is designed so that only the master that initiated communication with the module can change its configuration. This assures that the master always knows which state the module is currently in. To support this implementation, the USB interface is limited while the module is communicating via PROFIBUS. In this case, no commands are accepted through the USB interface, but all queries of settings and readings are supported.

5.2.1 GSD File

The PROFIBUS standard requires that all devices have a GSD (general station description) file that describes the functionality of the device. This file can be found on the USB drive included with the optional accessory kit, or it can be downloaded from https://www.lakeshore.com/. The PLC configuration software requires this file to be able to correctly configure and communicate with the 240 Series input module.

Once the GSD file is imported into the PLC software, the module becomes available to add to your PROFIBUS network. The module is configured as a PROFIBUS-DP, I/O device and can be found in the corresponding folder in your PLC software.

5.2.2 Configuration as a Modular Station

The 240 Series input module has been implemented as a modular station for the PROFIBUS interface. This allows the same GSD file to be used for the Model 240-2P (2 inputs) and the Model 240-8P (8 inputs). As a modular station, the module needs to be configured to send out the correct number of readings, and the PLC will also need to be configured to accept the same number of readings. The modules are capable of sending out up to eight slots of information. Each slot can then be configured to send out one floating point reading from any input, in any units (sensor, Kelvin, etc.) that are desired. This can be accomplished using the MeasureLINK™ for the 240 Series, or by using the PROFINUM and PROFISLOT commands. Only send out the required number of readings to minimize bus traffic. See section 4.3.3 for details on these settings.

Once the module is configured, the PLC needs to be configured to agree with the modules that are connected. This is done using the configuration software provided for your particular PLC. Under the device configuration settings for the module, there will be eight empty slots (because it is a modular station). For each reading that is returned from the module, add in a “Sensor Reading” type. Each sensor reading is a single-precision floating point value that will take four bytes of input address space. If not using all eight slots, leave the unused slots empty. The figure below is an example (using the Siemens TIA Portal® PLC software) showing a 240 Series input module configured to send two readings back.

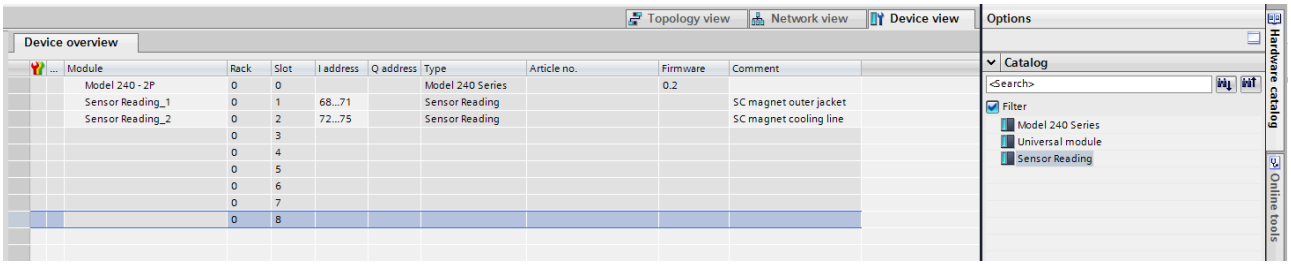

FIGURE 5-1 ***Example of a configuration***

5.2.3 Establishing Communication

PROFIBUS-DP communications are based on a state machine with four main states:

- Power On
- Wait for Parameterization
- Wait for Configuration
- Data Exchange

The communication LED on the front panel will indicate in which state the module is operating.

PROFIBUS state	Communication LED
Power On	Solid red
Parameterization	Flashing red
Configuration	Flashing green
Data Exchange	Solid green

TABLE 5-1 ***Communication states***

5.2.3.1 Power On State

When the module powers up, the PROFIBUS interface will be in the power on state. After initialization, the configured address will be applied. If the address is a valid address (1 – 126), the module will then enter the wait for parameterization state. An address of 126 is the default address, and allows a class 2 master to set the address for commissioning purposes. A module with an address of 126 will not leave the reset state until a valid address is assigned by either a class 2 master, or by using the MeasureLINK™ for the 240 Series software. The communication LED on the front panel of the module is solid red when it is in the power on state.

5.2.3.2 Parameterization State

Once the module has a valid address, it enters the parameterization state where the master attempts to communicate with the module. The master will send a parameterization telegram to the slave indicating which master will control it and in what mode the slave will operate, along with a watchdog timeout value. After the parameterization telegram has been received, the module will then proceed to the configuration state. The communication LED on the front panel of the module flashes red when it is in the parameterization state.

5.2.3.3 Configuration State

Once the module receives the parameterization telegram, it enters the configuration state. The master then sends a configuration telegram that describes the number of input and output bytes to be exchanged during each data exchange telegram.

- If the configuration does not match what the module is configured for, an error will be generated and the module will remain in the configuration state. If the module is stuck in this state, there is usually a disagreement between how the module is set up and what the PLC expects. See section 4.3.3.2 for communication settings.
- If the configuration matches the setup of the module, the module will proceed to the data exchange state. The communication LED on the front panel of the module flashes green when it is in the configuration state.

5.2.3.4 Data Exchange State

Once the module receives the configuration telegram and it matches the configured state of the module, the module then enters the data exchange state. In this state, the master initiates cyclic data exchanges with the module at some fixed interval. The PROFIBUS interface also uses a watchdog timer, which is set up during the parameterization state. If the master does not communicate with the module before the watchdog timer expires, the module goes back into the parameterization state and waits to be reconfigured. The communication LED on the front panel of the module is solid green when it is in the data exchange state.

5.2.4 RS-485 Mode

The default RS-485 protocol mode is PROFIBUS-DP as shipped from the factory. In order to configure ASCII serial protocol mode, the use of the newly added INTFSEL command is required (firmware version 2.4 or later). See section 5.3.6 for the command syntax, with the specific mode selection codes listed under INTFSEL in section 5.3.6.1.



This mode setting is persistent through subsequent power cycling until otherwise changed with the INTFSEL command.

5.3 Lake Shore Serial Communications

5.3.1 USB Interface

The USB interface is implemented as a virtual serial com port connection. This type of USB interface provides a simpler means of communicating than a standard USB implementation.

5.3.1.1 Hardware Support

The USB interface emulates an RS-232 serial port at a fixed 115,200 baud rate, but with the physical connections of a USB. This programming interface requires a certain configuration to communicate properly with the 240 Series input module. The proper configuration parameters are listed in the table below. These settings are configured automatically when using MeasureLINK™ for the 240 Series.

Baud rate	115,200
Data bits	8
Stop bits	1
Parity	None
Flow control	None
Handshaking	None

TABLE 5-2 ***Host com port configuration***

The USB hardware connection uses the full speed (12,000,000 bits/s) profile of the USB 2.0 standard; however, since the interface uses a virtual serial com port at a fixed data rate, the data throughput is still limited to a baud rate of 115,200 bits/s.

5.3.1.2 Installing the USB Driver

The USB driver has been made available through Windows® Update. This is the recommended method for installing the driver, as it will ensure that you always have the latest version of the driver installed. If you are unable to install the driver from Windows® Update, it may be downloaded from:
https://www.lakeshore.com/resources/software/drivers.

5.3.2 RS-485 Mode

The RS-485 interface allows either PROFIBUS-DP protocol or Lake Shore serial commands to be transmitted over the RJ-485 connector. The 240 Series input module is factory-configured for PROFIBUS-DP protocol on the RS-485 interface, but can be switched to Lake Shore serial communications mode using the INTFSEL command. With Lake Shore serial communications, the RS-485 interface operates as point-to-point communication only (single host to single instrument) and does not support multi-drop.

5.3.2.1 Selecting LS Serial Mode

The RS-485 protocol mode is selected using the INTFSEL command, which is documented in detail in section 5.3.6.1. To enable Lake Shore serial communications over RS-485, use the INTFSEL 3 via the USB interface.



This mode setting is persistent and will be retained through subsequent power cycles until changed again via the INTFSEL command or after a factory reset.

5.3.2.2 Hardware Connections

When communicating using Lake Shore serial communications, the polarity of the A and B terminals on the RS-485 connector should follow the plus and minus sign conventions of the host controller RS-485 port connection. Disregard the A/B letter designations, which are a PROFIBUS-specific notation.

With Lake Shore serial communications, the RS-485 interface operates as point-to-point communication only (single host to single instrument) and does not support multi-drop. The backplane cannot be used with multiple instruments in this mode.

5.3.2.3 Port Communications Configuration

The RS-485 serial interface requires a certain configuration to communicate properly with the 240 Series input module. The proper configuration parameters are listed in in the table below.

Baud rate	115,200
Data bits	8
Stop bits	1
Parity	None

TABLE 5-3 ***RS-485 host com port configuration***



Unlike PROFIBUS mode, the USB interface remains fully active and can be used to change module settings while the RS-485 interface is operating in Lake Shore Serial mode.

5.3.3 Communication

Communicating is done using message strings. The message strings should be carefully formulated by the user program according to some simple rules to establish effective message flow control.

5.3.3.1 Character Format

A character is the smallest piece of information that can be transmitted by the interface. The instrument uses the American Standard Code for Information Interchange (ASCII) format.

ASCII letter and number characters are used most often as character data. Punctuation characters are used as delimiters to separate different commands or pieces of data. A special ASCII character, line feed (LF 0AH), is used to indicate the end of a message string. This is called the message terminator. The 240 Series input module will accept either the line feed character alone, or a carriage return (CR 0DH) followed by a line feed as the message terminator. The instrument query response terminator will include both carriage return and line feed.

5.3.3.2 Message Strings

A message string is a group of characters assembled to perform an interface function. There are three types of message strings: commands, queries, and responses. The computer issues command and query strings through user programs, the instrument issues responses. Two or more command or query strings can be chained together in one communication, but they must be separated by a semicolon (;). The total communication string must not exceed 255 characters in length.

A command string is issued by the computer and instructs the instrument to perform a function or change a parameter setting. The format is:

`<command mnemonic><space><parameter data><terminators>.`

Command mnemonics and parameter data necessary for each string is described in section 5.3.6. Terminators must be sent with every message string.

A query string is issued by the computer and instructs the instrument to send a response. The query format is:

<query mnemonic><?><space><parameter data><terminators>.

Query mnemonics are often the same as commands with the addition of a question mark. Parameter data is often unnecessary when sending queries. Query mnemonics and parameter data, if necessary, are described in section 5.3.6. Terminators must be sent with every message string. The computer expects a response soon after a query is sent.

A response string is the instrument's response or answer to a query string. The response can be a reading value, status report, or the present value of a parameter. Response data formats are listed along with the associated queries in section 5.3.6. The response is sent as soon as possible after the instrument receives the query.

5.3.4 Message Flow Control

It is important to remember that the user program is in charge of the USB communication at all times. The 240 Series input module cannot initiate communication, determine which device should be transmitting at a given time, or guarantee timing between messages. All of this is the responsibility of the user program.

When issuing USB commands, the user program alone should:

- Properly format and transmit the command including the terminator as one string
- A delay of 10 ms is needed between commands

When issuing USB queries or queries and commands together, the user program should:

- Properly format and transmit the query including the terminator as one string
- Prepare to receive a response immediately
- Receive the entire response from the instrument including the terminator

Failure to follow these timing guidelines may result in inability to establish communication with the instrument or intermittent failures in communication.

5.3.5 Communication Status LED Indicators

The communication status LED indicates Modbus communication state:

Fieldbus Mode	State/Condition	LED Color	Pattern	Meaning
Profibus	Power-on or reset	RED	Solid	Device initializing
	Waiting for parameters	RED	Blinking	Awaiting Profbus master configuration
	Waiting for configuration	GREEN	Blinking	Profibus negotiation in progress
	Data exchange	GREEN	Solid	Actively communicating on Profibus
Modbus RTU	Mode selected and active	GREEN	Solid	Modbus active
	Port unavailable	RED	Solid	Modbus stack not initialized
	CRC error detected	RED	Solid	Sticky fault indication; stays red until CRC error counters are cleared
LS Serial	Mode selected and active	GREEN	Solid	Lake Shore serial active

TABLE 5-4 ***Communication status LED indicators***

5.3.6 Command Summary

This section provides a listing of the interface commands for use with the USB interface, and over RS-485 when in LS serial mode.

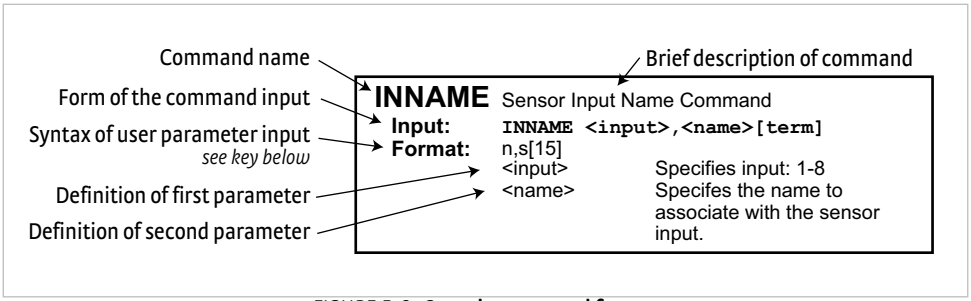

FIGURE 5-2 ***Sample command format***

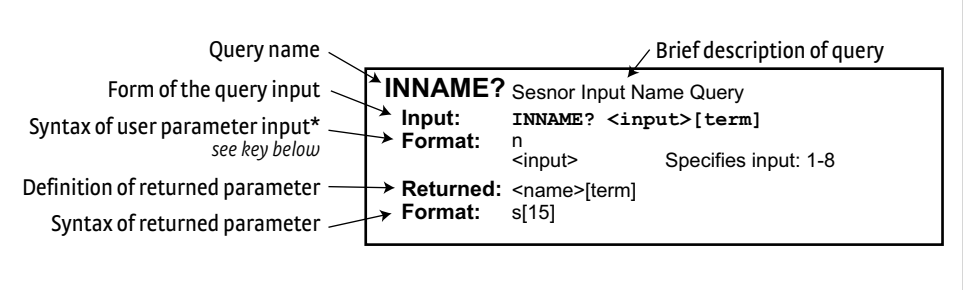

FIGURE 5-3 ***Sample query format***

Command	Function	Page	Command	Function	Page
∗IDN?	Identification Query	38	INNAME?	Sensor Input Name Query	41
ADDR	PROFIBUS Address Cmd	39	INTFSEL	Interface Select Command	42
ADDR?	PROFIBUS Address Query	39	INTFSEL?	Interface Select Query	42
BRIGT	Display Brightness Cmd	39	INTYPE	Input Type Parameter Cmd	42
BRIGT?	Display Brightness Query	39	INTYPE?	Input Type Parameter Query	43
CRDG?	Celsius Reading Query	39	KRDG?	Kelvin Reading Query	43
CRVDEL	Curve Delete Cmd	39	MODNAME	Module Name Cmd	43
CRVHDR	Curve Header Cmd	40	MODNAME?	Module Name Query	43
CRVHDR?	Curve Header Query	40	PROFINUM	PROFIBUS Slot Count Cmd	44
CRVPT	Curve Data Point Cmd	40	PROFINUM?	PROFIBUS Slot Count Query	44
CRVPT?	Curve Data Point Query	40	PROFISLOT	PROFIBUS Slot Configuration Cmd	44
DFLT	Factory Defaults Cmd	40	PROFISLOT?	PROFIBUS Slot Configuration Query	44
FILTER	Input Filter Parameter Cmd	41	PROFISTAT?	PROFIBUS Connection Status Query	44
FILTER?	Input Filter Parameter Query	41	RDGST?	Input Reading Status Query	44
FRDG?	Fahrenheit Reading Query	41	SRDG?	Sensor Units Input Reading Query	45
INNAME	Sensor Input Name Cmd	41			

TABLE 5-5 ***Command summary***

5.3.6.1 Interface Commands

This section lists the interface commands in alphabetical order.

✱	Begins common interface command
?	Required to identify queries
s[n]	String of alphanumeric characters with length "n." Send these strings using surrounding quotes. Quotes enable characters such as commas and spaces to be used without the instrument interpreting them as delimiters.
nn...	String of number characters that may include a decimal point.
dd	Dotted decimal format, common with IP addresses. Always contains 4 dot separated 3-digit decimal numbers, such as 192.168.000.012.
[term]	Terminator characters
<...>	Indicates a parameter field, many are command specific.
<state>	Parameter field with only On/Off or Enable/Disable states.
<value>	Floating point values have varying resolution depending on the type of command or query issued.

TABLE 5-6 ***Interface commands key***

✱IDN? Identification Query

Input `✱IDN? [term]`

Returned Format <manufacturer>,<model>,<instrument serial>, <firmware version>[term]

s[4],s[11],s[7],n.n

<manufacturer>	Manufacturer ID
<model>	Instrument model number
<instrument serial>	Instrument serial number
<firmware version>	Instrument firmware version

Example LSCI,MODEL240-2P,1234567,1.0

ADDR PROFIBUS Address Command

Input `ADDR <address>[term]`
Format nnn
<address> Specifies the PROFIBUS address, 1-126.
Remarks Configures the PROFIBUS address for the module. An address of 126 indicates that it is not configured and it then can be set by a PROFIBUS master.

ADDR? PROFIBUS Address Query

Input `ADDR? [term]`
Returned <address> [term]
Format nnn (refer to command for description)

BRIGT Display Brightness Command

Input `BRIGT <brightness value>[term]`
Format n
<brightness value> 0–4
Remarks Sets the display brightness for the front panel display 0=off, 1=25%, 2=50%, 3=75%, 4=100%.

BRIGT? Display Brightness Query

Input `BRIGT? [term]`
Returned <brightness value>[term]
Format nnn (refer to command for description)

CRDG? Celsius Reading Query

Input `CRDG? <input>[term]`
Format n
<input> Specifies which input to query: 1-8.
An input of '0' returns all channel readings.
Returned <temp value>[term]
Or if all inputs are queried:
<ch 1 value>, <ch 2 value>, <ch 3 value>, <ch 4 value>, <ch 5 value>, <ch 6 value>, <ch 7 value>, <ch 8 value>
Format ±nnnnnn
Or if all inputs are queried: ±nnnnnn, ±nnnnnn, ±nnnnnn, ±nnnnnn, ±nnnnnn, ±nnnnnn, ±nnnnnn, ±nnnnnn[term]
Remarks Also see the RDGST? query.
Accepting '0' for the input number is only available on firmware version 2.3 or later.

CRVDEL Curve Delete Command

Input `CRVDEL <input>[term]`
Format n
<input> Specifies a user curve to delete. Valid entries: 1-8.
Example **CRVDEL 1[term]** deletes User Curve for input 1.

CRVHDR Curve Header Command

Input `CRVHDR <input>,<name>,<SN>,<format>,<limit value>,<coefficient>[term]`

Format n,s[15],s[10],n,+nnn.nnn,n

<input>	Specifies which input curve to configure. Valid entries: 1-8.
<name>	Specifies curve name. Limited to 15 characters.
<SN>	Specifies the curve serial number. Limited to ten characters.
<format>	Specifies the curve data format. Valid entries: 2 = V/K, 3 =)/K, 4 = log)/K.
<limit value>	Specifies the curve temperature limit in kelvin.
<coefficient>	Specifies the curve temperature coefficient. Valid entries: 1 = negative, 2 = positive.

Remarks Configures the user curve header. The coefficient parameter will be calculated automatically based on the first two curve datapoints. It is included as a parameter for compatability with the CRVHDR? query.

Example **CRVHDR 1,DT-670,00011134,2,325.0,1[term]** Configures User Curve for input 1 with a name of DT-670, serial number of 00011134, data format of volts versus kelvin, upper temperature limit of 325 K, and negative coefficient.

CRVHDR? Curve Header Query

Input `CRVHDR? <input>[term]`

Format n

<input>	Specifies which input curve to query: 1–8.

Returned Format <name>,<SN>,<format>,<limit value>,<coefficient>[term]
s[15],s[10],n,+nnn.nnn,n (refer to command for description)

CRVPT Curve Data Point Command

Input `CRVPT <input>,<index>,<units value>,<temp value>[term]`

Format n,nnn,±nnnnnn,+nnnnnn

<input>	Specifies which input curve to configure. Valid entries: 1-8.
<index>	Specifies the points index in the curve. Valid entries: 1–200.
<units value>	Specifies sensor units for this point to six digits.
<temp value>	Specifies the corresponding temperature in kelvin for this point to six digits.

Remarks Configures a user curve data point.

Example **CRVPT 1,2,0.10191,470.000,N[term]** Sets User Curve for input 1 second data point to 0.10191 sensor units and 470.000 K.

CRVPT? Curve Data Point Query

Input `CRVPT? <input>,<index>[term]`

Format n,nnn

<input>	Specifies which input curve to query: 1–8.
<index>	Specifies the points index in the curve: 1–200.

Returned Format <units value>,<temp value>[term]
±nnnnnn,+nnnnnn (refer to command for description)

Remarks Returns a standard or user curve data point.

DFLT Factory Defaults Command

Input `DFLT 99 [term]`

Remarks Sets all configuration values to factory defaults and resets the instrument. The “99” is included to prevent accidentally setting the unit to defaults.

FILTER Input Filter Parameter Command

Input `FILTER <input>,<filter length>[term]`
Format n,nnn

<input>	Specifies which input to configure: 1-8.
<filter length>	Specifies the number of 1 ms points to average for each update (1 to 100)

Remarks Available only on the Model 240-2P. The Model 240-8P always averages 100 points. Available only in non-reversing mode.
Example **FILTER 2,100 [term]** Filter input 2 data to 10 readings per second.

FILTER? Input Filter Parameter Query

Input `FILTER? <input>[term]`
Format n

<input>	Specifies which input to query: 1-8.

Returned Format <filter length>[term]
nnn (refer to command for description)

FRDG? Fahrenheit Reading Query

Input `FRDG? <input>[term]`
Format n

<input>	Specifies which input to query: 1-8. An input of '0' returns all channel readings.

Returned <temp value>[term]
Or if all inputs are queried:
<ch 1 value>, <ch 2 value>, <ch 3 value>, <ch 4 value>, <ch 5 value>, <ch 6 value>, <ch 7 value>, <ch 8 value>
Format ±nnnnnn
Or if all inputs are queried: ±nnnnnn, ±nnnnnn, ±nnnnnn, ±nnnnnn, ±nnnnnn, ±nnnnnn, ±nnnnnn, ±nnnnnn[term]
Remarks Also see the RDGST? query.
Accepting '0' for the input number is only available on firmware version 2.3 or later.

INNAME Sensor Input Name Command

Input `INNAME <input>,<name>[term]`
Format n,s[15]

<input>	Specifies which input to configure: 1-8.
<name>	Specifies the name to associate with the sensor input.

Example **INNAME1, "Sample Space" [term]** The string "Sample Space" will be available over the interface to identify the sensor information being displayed.
Remarks Be sure to use quotes when sending strings, otherwise characters such as spaces, and other non alpha-numeric characters, will be interpreted as a delimiter and the full string will not be accepted. It is not recommended to use commas or semi-colons in sensor input names as these characters are used as delimiters for query responses.

INNAME? Sensor Input Name Query

Input `INNAME? <input>[term]`
Format n

<input>	Specifies which input to query: 1-8.

Returned Format <name>[term]
s[15] (refer to command for description)

INTFSEL Interface Select Command

Input `INTFSEL <mode>[term]`

Format n

Remarks Selects the communication interface used on the RS-485 port 1 = Profibus, 2 = Modbus RTU for future use, 3 = Lake Shore serial commands.

Feature	Profibus	Modbus RTU	LS Serial
Factory default	Yes	No	No
Multi-drop network	Yes	Yes	No
Cyclic PLC data	Yes	No	No
Register Acces	No	Yes	Command based
GSD required	Yes	No	No

INTFSEL? Interface Select Query

Input `INTFSEL?[term]`

Returned <mode>[term]

Format n (refer to command for description)

INTYPE Input Type Parameter Command

Input `INTYPE <input>,<sensor type>,<autorange>,<range>,<current reversal>,<units>,<disabled/enabled>[term]`

Format n,n,n,n,n,n,n

<input> Specifies which input to configure: 1-8.

<sensor type> Specifies input sensor type:
1 = Diode
2 = Platinum RTD
3 = NTC RTD

<autorange> Specifies autoranging: 0 = off and 1 = on.

<range> Specifies input range when autorange is off:

Diode	0 = 7.5 V (10 µA)
Platinum RTD	0 = 1 k) (1 mA)
NTC RTD	0 = 10) (1 mA)
	1 = 30) (300 µA)
	2 = 100) (100 µA)
	3 = 300) (30 µA)
	4 = 1 k) (10 µA)
	5 = 3 k) (3 µA)
	6 = 10 k) (1 µA)
	7 = 30 k) (300 nA)
	8 = 100 k) (100 nA)

<current reversal> Specifies input current reversal where 0 = off and 1 = on. Current reversal is used to remove thermal EMF errors on resistive sensors. Always 0 if input is a diode.

<units> Specifies the preferred units parameter. <disabled/enabled> Input is disabled or enabled. 0 = disabled, 1 = enabled.

Example **INTYPE 1,2,1,0,1,1,1[term]** Sets Input 1 sensor type to platinum RTD, autorange on, current reversal on, displayed units to kelvin, and input enabled.

Remarks The <autorange> and <range> parameters do not apply to diode and platinum RTD sensor types. The <current reversal> parameter does not apply to the diode sensor type. When configuring diode or platinum RTD sensor types, these parameters must be included, but are ignored. A setting of 0 for each is recommended in this case. If the input is disabled, it will be skipped in the scanning cycle (240-8P).

INTYPE? Input Type Parameter Query

Input `INTYPE? <input>[term]`

Format n

<input> Specifies which input to query: 1-8.

Returned <sensor type>,<autorange>,<range>,<current reversal>,<units>, <disabled/enabled>[term]

Format n,n,n,n,n,n (refer to command for description)

Remarks If autorange is on, the returned range parameter is the currently auto-selected range.

KRDG? Kelvin Reading Query

Input `KRDG? <input>[term]`

Format n

<input> Specifies which input to query: 1-8.
An input of '0' returns all channel readings.

Returned <kelvin value>
Or if all inputs are queried:
<ch 1 value>, <ch 2 value>, <ch 3 value>, <ch 4 value>, <ch 5 value>, <ch 6 value>, <ch 7 value>, <ch 8 value>

Format ±nnnnnn
Or if all inputs are queried: ±nnnnnn, ±nnnnnn, ±nnnnnn, ±nnnnnn, ±nnnnnn, ±nnnnnn, ±nnnnnn, ±nnnnnn[term]

Remarks Also see the RDGST? query.
Accepting '0' for the input number is only available on firmware version 2.3 or later.

MODNAME Module Name Command

Input `MODNAME <name>[term]`

Format s[32]

<name> Specifies the name or a description to help identify the module.

Example **MODNAME "Magnet 5 Cooling Line"[term]** The string "Magnet 5 Cooling Line" will be available over the interface to identify the module.

Remarks Be sure to use quotes when sending strings, otherwise characters such as spaces, and other non alpha-numeric characters, will be interpreted as a delimiter and the full string will not be accepted. It is not recommended to use commas or semi-colons in sensor input names as these characters are used as delimiters for query responses.

MODNAME? Module Name Query

Input `MODNAME? [term]`

Returned <name>[term]

Format s[32] (refer to command for description)

PROFINUM PROFIBUS Slot Count Command

Input `PROFINUM <count>[term]`

Format n

<count> Specifies the number of PROFIBUS slots: 1-8.

Remarks Configures the number of PROFIBUS slots for the instrument to present to the bus as a modular station. The lowest <count> slot numbers are used.

PROFINUM? PROFIBUS Slot Count Query

Input `PROFINUM? [term]`

Returned <count>[term]

Format n (refer to command for description)

PROFISLOT PROFIBUS Slot Configuration Command

Input `PROFISLOT <slot>,<channel>,<units>[term]`

Format n,n,n

<slot> Specifies which slot to configure: 1-8.

<channel> Specifies which input to associate with the slot: 1-8.

<units> Specifies the units to use for the data in this slot. 1 = Kelvin, 2 = Celsius, 3 = sensor, 4 = Fahrenheit

Example **PROFISLOT 1,2,1[term]** Slot 1 outputs the value from input 2 in units of kelvin.

Remarks Configures what data to present on the given PROFIBUS slot. Note that the correct number of slots must be configured with the PROFINUM command, or the slot may be ignored.

PROFISLOT? PROFIBUS Slot Configuration Query

Input `PROFISLOT? <input>[term]`

Format n

<input> Specifies which input to query: 1-8.

Returned <channel>,<units>[term]

Format n,n (refer to command for description)

PROFISTAT? PROFIBUS Connection Status Query

Input `PROFISTAT? [term]`

Returned <status>,[term]

Format n

<status> 0 = Power on reset
1 = Waiting for parameterization
2 = Waiting for configuration
3 = Data exchange

RDGST? Input Reading Status Query

Input `RDGST? <input>[term]`

Format n

<input> Specifies which input to query: 1-8.

Returned <status bit weighting>[term]

Format nnn

Remarks The integer returned represents the sum of the bit weighting of the input status flag bits. A “000” response indicates a valid reading is present.

Bit	Bit weighting	Status indicator
0	1	invalid reading

Bit	Bit weighting	Status indicator
4	16	temp underrange
5	32	temp overrange
6	64	sensor units under range
7	128	sensor units overrange

SRDG? Sensor Units Input Reading Query

Input Format `SRDG? <input>[term]`

n

<input> Specifies which input to query: 1-8.
An input of '0' returns all channel readings.

Returned <sensor units value>[term]
Or if all inputs are queried:
<ch 1 value>, <ch 2 value>, <ch 3 value>, <ch 4 value>, <ch 5 value>, <ch 6 value>, <ch 7 value>, <ch 8 value>

Format ±nnnnnn
Or if all inputs are queried: ±nnnnnn, ±nnnnnn, ±nnnnnn, ±nnnnnn, ±nnnnnn, ±nnnnnn, ±nnnnnn, ±nnnnnn[term]

Remarks Also see the RDGST? command.
Accepting '0' for the input number is only available on firmware version 2.3 or later.

5.4 Modbus RTU

5.4.1 Overview

The Model 240 Input Module supports Modbus RTU communication over RS-485 for integration with PLCs, SCADA systems, and other industrial Modbus masters.

5.4.1.1.1 Specifications

Parameter	Value
Protocol	Modbus RTU
Interface	RS-485, 2-wire half-duplex
Address range	1-247 (default: 1)
Baud rates	9600, 19200, 38400, 57600, 115200 (default)
Parity	None (8N2), Even (8E1), Odd (8O1); default: Even
Function codes	FC01, FC02, FC03, FC04, FC05, FC06, FC08, FC15, FC16

TABLE 5-7 ***Specifications***

5.4.1.1.2 Data Types

Type	Size	Encoding
uint16	1 register	Unsigned 16-bit integer
int32	2 registers	Signed 32-bit integer, MSW-first by default
float32	2 registers	IEEE 754 single-precision, MSW-first by default

TABLE 5-8 ***Data types***

Word Order: Register N contains the most significant word (MSW) by default. This can be changed to LSW-first via Holding Register 3 for compatibility with PLCs that expect little-endian word order (e.g., Schneider/Modicon).

5.4.1.1.3 Addressing exception behavior

- Requests that include any **undefined register address** return Modbus exception `0x02` (Illegal Data Address)
- Writes with out-of-range values for defined writable fields return Modbus exception `0x03` (Illegal Data Value)
- Reserved addresses within a defined block remain legal and return documented values (commonly 0)

5.4.1.1.4 Function code quantity limits

- FC01 Read Coils: 1..2000
- FC02 Read Discrete Inputs: 1..2000
- FC03 Read Holding Registers: 1..125
- FC04 Read Input Registers: 1..125
- FC15 Write Multiple Coils: 1..1968
- FC16 Write Multiple Registers: 1..123

5.4.2 Configuration via USB

The following USB serial commands configure Modbus parameters:

Command	Query	Description	Values
`INTFSEL n`	`INTFSEL?`	Set active fieldbus	1=Profibus, 2=Modbus RTU, 3=LS serial
`MBADDR n`	`MBADDR?`	Modbus slave address	1-247
`MBAUD n`	`MBBAUD?`	Baud rate index	0-4 (see section 5.4.6.2.1)
`MBPARITY n`	`MBPARITY?`	Parity mode	0=None (8N2), 1=Even (8E1), 2=Odd (8O1)
`MBWORD`	`MBWORD?`	Word order	0=MSW-first, 1=LSW-first

TABLE 5-9 ***Configuration via USB***

`ADDR/PROFINUM/PROFISLOT/PROFISTAT?` are PROFIBUS USB commands and are intentionally not exposed as Modbus registers.

Recovery: If communication is lost after changing the address, baud rate, parity, or word order Modbus, use the USB commands above to reconfigure. The `DFLT 99` command resets all settings to factory defaults.

5.4.3 Quick Start

1. Connect RS-485 (A/B) to the Model 240.
2. Via USB, set Modbus mode: `INTFSEL 2.`
3. Optionally, configure Modbus settings via USB. For example, send `MBADDR 10` to set the address to 10. See section 5.4.2 for all Modbus configuration commands.
4. Configure your Modbus master: slave 10, 115200 baud, 8E1.
5. Read Input Register 10 (2 registers) to get Channel 1 Kelvin temperature.

Example: Reading Channel 1 Temperature (Kelvin)
Request (hex): `0A 04 00 0A 00 02 50 B2`

Byte	Value	Meaning
0A	10	Slave address
04	FC04	Read input registers
00 0A	10	Start address (Ch1 Kelvin)
00 02	2	Register count
50 B2	CRC	CRC-16/Modbus

TABLE 5-10 ***Example request***

Response (hex): `0A 04 04 43 92 33 33 A1 C8`

Byte	Value	Meaning
0A	10	Slave address
04	FC04	Function code
04	4	Byte count
43 92	MSW	} IEEE 754: 292.4 K
33 33	LSW	}
A1 C8	CRC	CRC-16/Modbus

TABLE 5-11 ***Example response***

5.4.4 Communication Status LED Indicators

The communication status LED indicates Modbus communication state:

Fieldbus Mode	State/Condition	LED Color	Pattern	Meaning
Profibus	Power-on or reset	RED	Solid	Device initializing
	Waiting for parameters	RED	Blinking	Awaiting Profbus master configuration
	Waiting for configuration	GREEN	Blinking	Profibus negotiation in progress
	Data exchange	GREEN	Solid	Actively communicating on Profibus
Modbus RTU	Mode selected and active	GREEN	Solid	Modbus active
	Port unavailable	RED	Solid	Modbus stack not initialized
	CRC error detected	RED	Solid	Sticky fault indication; stays red until CRC error counters are cleared
LS Serial	Mode selected and active	GREEN	Solid	Lake Shore serial active

TABLE 5-12 ***Communication status LED indicators***

5.4.5 Modbus Communication Configuration Commands

INTFSEL — Fieldbus Interface Select Command

Input `INTFSEL <idx>[term]`
Format n (1=Profibus (default), 2=Modbus RTU, 3=LS serial)
Remarks Selects the active fieldbus interface mode.

INTFSEL? — Fieldbus Interface Select Query

Input `INTFSEL?[term]`
Returned <idx>[term]
Format n (refer to command for description)

MBADDR — Modbus Address Command

Input `MBADDR <n>[term]`
Format n (1 to 247, default: 1)
Remarks Sets the Modbus RTU slave address for RS-485 operation.

MBADDR? — Modbus Address Query

Input `MBADDR? [term]`
Returned <n>[term]
Format n (refer to command for description)

MBBAUD — Modbus Baud Rate Command

Input `MBBAUD <idx>[term]`
Format n (0=9600, 1=19200, 2=38400, 3=57600, 4=115200 (default))
Remarks Sets the band rate for Modbus RTU mode over RS-485.

MBBAUD? — Modbus Baud Rate Query

Input `MBBAUD? [term]`
Returned <idx>[term]
Format n (refer to command for description)

MBPARITY — Modbus Parity Command

Input `MBPARITY <idx>[term]`
Format n (0=None (default), 1=Even (8E1), 2=Odd)
Remarks Sets the parity for Modbus RTU mode over RS-485.

MBPARITY? — Modbus Parity Query

Input `MBPARITY? [term]`
Returned <idx>[term]
Format n (refer to command for description)

MBWORD Modbus Word Order Command

Input `MBWORD <idx>[term]`
Format n (0=MSW-first (default), 1=LSW-first)
Remarks Sets the Modbus 32-bit register word order (float32/int32) for RS-485 Modbus RTU mode.

MBWORD? Modbus Word Order Query

Input `MBWORD? [term]`
Returned Format <idx>[term]
n (refer to command for description)

5.4.6 Register Map

5.4.6.1 Input Registers (FC04 — Read Only)

5.4.6.1.1 Module Identification (IR 0–9)

Address	Name	Type	Description
0	Manufacturer ID	uint16	`0x4C53` ("LS" = Lake Shore)
1	Product code	uint16	240
2	Firmware major	uint16	e.g., 2
3	Firmware minor	uint16	e.g., 4
4	Number of channels	uint16	2 (240-2P) or 8 (240-8P)
5-8	Serial number	packed ASCII	Device serial number, 4 registers (8 bytes). Same encoding as curve and name registers: each register holds two ASCII characters, high byte first. Unused trailing bytes are `0x00`.
9	Fieldbus mode	uint16	1 (Modbus RTU)

TABLE 5-13 ***Module identification***

5.4.6.1.2 Temperature Readings — Kelvin (IR 10–25)

Eight channels of calibrated temperature in Kelvin. Each reading occupies two consecutive registers (float32).

Address	Channel	Type
10-11	1	float 32
12-13	2	
14-15	3	
16-17	4	
18-19	5	
20-21	6	
22-23	7	
24-25	8	

TABLE 5-14 ***Temperature readings: Kelvin (IR 10-25)***

Formula: Channel N address = 10 + (N − 1) × 2
Tip: Read all 8 channels in one request: start address 10, quantity 16.

5.4.6.1.3 Temperature Readings — Celsius (IR 30–45)

Same layout as Kelvin, starting at address 30.

Address	Channel	Type
30-31	1	float 32
32-33	2	float 32
--	--	--
44-45	8	float 32

TABLE 5-15 ***Temperature readings: Celsius (IR 30-45)***

5.4.6.1.4 Temperature Readings — Fahrenheit (IR 50–65)

Same layout as Kelvin, starting at address 50.

Address	Channel	Type
50-51	1	float 32
52-53	2	float 32
--	--	--
64-65	8	float 32

TABLE 5-16 ***Temperature readings: Fahrenheit (IR 50-65)***

5.4.6.1.5 Sensor Units Readings (IR 70–85)

Raw sensor readings in native units — Ohms for RTD sensors, Volts for diode sensors.

Address	Channel	Type
70-71	1	float 32
72-73	2	float 32
--	--	--
84-85	8	float 32

TABLE 5-17 ***Sensor unit readings (IR 70-85)***

5.4.6.1.6 Channel Status Words (IR 90–97)

One status word per channel.

Address	Channel
90	1
91	2
--	--
97	8

TABLE 5-18 ***Channel status words (IR 90-97)***

Bit	Name	Description
0	Reading invalid	1 = reading is invalid (settling, disabled, or no curve)
1	Temperature underrange	1 = temperature below curve range
2	Temperature overrange	1 = temperature above curve range
3	Sensor underrange	1 = sensor below excitation range
4	Sensor overrange	1 = sensor above excitation range
5-15	Reserved	Always 0

TABLE 5-19 ***Bit definitions***

5.4.6.1.7 Present Range (IR 100–107)

Current excitation range per channel (may differ from commanded range during autoranging).

Address	Channel
100	1
101	2
102	3
103	4
104	5
105	6
106	7
107	8

TABLE 5-20 ***Present range (IR 100-107)***

Value	Excitation	Resistance range
0	1000 µA	~10 Ω
1	300 µA	~30 Ω
2	100 µA	~100 Ω
3	30 µA	~300 Ω
4	10 µA	~1 kΩ
5	3 µA	~3 kΩ
6	1 µA	~10 kΩ
7	300 nA	~30 kΩ
8	100 nA	~100 kΩ

TABLE 5-21 ***Range values***

5.4.6.1.8 Raw ADC Data (IR 200–235)

Address	Name	Type
200-215	ADC counts (Ch1-Ch8)	int32 per channel
220-235	ADC counts (Cha1-Ch8)	int32 per channel

TABLE 5-22 ***Raw ADC data (IR 200-235)***

Model-aware channel behavior:

- *240-8P:* Ch1–Ch8 are physical channels and return live ADC data.
- *240-2P:* Ch1–Ch2 are physical channels; Ch3–Ch8 read as zero in both ADC blocks.

5.4.6.2 Holding Registers (FC03/FC06/FC16 — Read/Write)

5.4.6.2.1 Modbus Configuration (HR 0–9)

Address	Name	Type	Range	Default	Description
0	Slave address	uint16	1-247	1	Modbus slave address
1	Baud rate	uint16	0-4	4	See baud rate table, below
2	Parity	uint16	0-2	0	0=None, 1=Even (8E1), 2=Odd
3	Word order	uint16	0-1	0	0=MSW-first, 1=LSW-first
4-9	Reserved	--	--	0	

TABLE 5-23 ***Modbus configuration (HR 0-9)***

Address	Channel
0	9600
1	19200
2	38400
3	57600
4	115200

TABLE 5-24 ***Baud rate***



Writing to HR 0, 1, 2, or 3 triggers a communication restart. The response is sent at the current settings before the new settings take effect. If the new address, baud rate, or word order is unknown, use the USB `MBADDR?`, `MBBAUD?`, and `MBWORD?` commands for recovery.

5.4.6.2.2 Module Settings (HR 10–19)

Address	Name	Type	Range	Default	Description
10	Display brightness	uint16	0-4	1	0=Off, 1=25%, 2=50%, 3=75%, 4=100%
11	Factory reset unlock	uint16	write-only	--	Write `0x4C53` to arm a factory reset request
12	Factory reset execute	uint16	write-only	--	Write `99` within the timeout window to execute factory reset
13	Factory reset status	uint16	0-4	0	0=Locked, 1=Armed, 2=Complete, 3=Expired, 4=Rejected
14-19	Reserved	--	--	0	

TABLE 5-25 ***Module settings (HR 10-19)***

Factory reset workflow: Write `0x4C53` to HR 11, then write `99` to HR 12 within 5 seconds. A successful reset restores factory defaults using the same behavior as the `USB DFLT 99` command. Read HR 13 to confirm whether the request is armed, completed, expired, or rejected.

5.4.6.2.3 Channel Configuration (HR 100–179)

Each channel occupies 10 consecutive registers. Channel N base address = 100 + (N – 1) × 10.

Offset	Name	Type	Range	Description
0	Sensor type	uint16	0-3	0=Disabled, 1=Diode, 2=Platinum RTD, 3=NTC RTD
1	Autorange	uint16	0-1	0=Off, 1=On (NTC RTD only)
2	Range	uint16	0-8	Excitation range (see TABLE 5-20)
3	Input enabled	uint16	0-1	0=Disabled, 1=Enabled
4	Units	uint16	1-4	1=Kelvin, 2=Celsius, 3=Sensor units, 4=Fahrenheit
5	Current reversal	uint16	0-1	0=Off, 1=On (RTD only)
6	Filter length	uint16	1-100	Number of samples in averaging filter; fixed at `100` on the 240-8P
7-9	Reserved	--	--	

TABLE 5-26 ***Channel configuration (HR 100-179)***

Channel	Address range
1	100-109
2	110-119
3	120-129
4	130-139
5	140-149
6	150-159
7	160-169
8	170-179

TABLE 5-27 ***Channel address map***

Validation rules: Invalid combinations are silently coerced. For example, setting autorange=1 on a diode sensor is coerced to autorange=0. On the 240-8P, filter writes are accepted but read back as 100 because that model uses the fixed half-phase filter path. Read back the register after writing to verify the applied value.

5.4.6.2.4 Curve Management (HR 300–555)

Each channel occupies 32 consecutive registers. Channel N base address = 300 + (N – 1) × 32.

This block exposes Modbus parity for USB curve commands `CRVHDR`, `CRVPT`, and `CRVDEL`, while preserving the Model 240 fixed 1:1 mapping (channel N uses curve N).

Offset	Name	Type	Access	Description
0	Curve format	uint16	R/W	Staged format: 2=V/K, 3=Ohm/K, 4=log(Ohm)/K
1-2	Curve limit value	float32	R/W	Staged limit value
3	Curve coefficient	uint16	R	Derived from first two points (1=negative, 2=positive)
4-11	Curve name	packed ASCII	R/W	16 bytes (8 registers), high-byte then low-byte per register
12-17	Curve serial	packed ASCII	R/W	12 bytes (6 registers), high-byte then low-byte per register
18	Curve point index	uint16	R/W	Selected point index (1-200)
19-20	Point sensor units	float32	R/W	Staged point X value
21-22	Point temperature	float32	R/W	Staged point Y value
23	Apply point	uint16	W	Write `1` to apply staged point at selected index
24	Delete curve	uint16	W	Write `99` to reset curve to default (`CRVDEL`)
25-30	Reserved	--	--	Returns 0
31	Apply heater	uint16	W	Write `1` to apply staged header (`CRVHDR`)

TABLE 5-28 ***Curve management (HR 300-555)***

Packed ASCII encoding: each 16-bit register contains two ASCII characters: first character in the high byte, second in the low byte.

Typical workflows:

- *Header update (CRVHDR):* write offsets 0, 1–2, 4–11, 12–17, then write `1` to offset 31.
- *Point update (CRVPT):* write offsets 18, 19–20, 21–22, then write `1` to offset 23.
- *Curve delete (CRVDEL):* write `99` to offset 24.

5.4.6.2.5 Name Metadata (HR 560–639)

This block exposes Modbus parity for USB commands `MODNAME` and `INNAME`.

Address	Name	Type	Access	Description
560-575	Module name	packed ASCII	R/W	32-byte register slot (16 registers); max 31 usable characters, null-terminated
576-583	Input name Ch 1			16-byte register slot (8 registers); max 14 usable characters, null-terminated
584-591	Input name Ch 2			16-byte register slot (8 registers); max 14 usable characters, null-terminated
592-599	Input name Ch 3			16-byte register slot (8 registers); max 14 usable characters, null-terminated
600-607	Input name Ch 4			16-byte register slot (8 registers); max 14 usable characters, null-terminated
608-615	Input name Ch 5			16-byte register slot (8 registers); max 14 usable characters, null-terminated
616-623	Input name Ch 6			16-byte register slot (8 registers); max 14 usable characters, null-terminated
624-631	Input name Ch 7			16-byte register slot (8 registers); max 14 usable characters, null-terminated
632-639	Input name Ch 8			16-byte register slot (8 registers); max 14 usable characters, null-terminated

TABLE 5-29 ***Name metadata (HR 560-639)***

For 240-2P, channels 3–8 read as zero and writes have no effect, matching other channel-scoped Modbus blocks.

Packed ASCII encoding: each 16-bit register contains two ASCII characters: first character in the high byte, second in the low byte.

5.4.6.3 Discrete Inputs (FC02 — Read Only)

Individual status bits per channel. Each channel occupies 8 discrete inputs (stride 8). Channel N base address = (N − 1) × 8.

Address range: 0–63 (8 bits per channel × 8 channels). Requests specifying (start_addr + count) > 64 return Modbus exception 0x02 (Illegal Data Address).

Offset	Name	Description
0	Reading invalid	1 = Reading invalid
1	Temp underrange	1 = Below curve range
2	Temp overrange	1 = Above curve range
3	Sensor underrange	1 = Below excitation range
4	Sensor overrange	1 = Above excitation range
5-7	Reserved	Always 0

TABLE 5-30 ***Discrete inputs (FC02 — read only)***

Tip: Read all 64 discrete inputs in one request: start address 0, quantity 64.

5.4.6.4 Coils (FC01/FC05/FC15)

No coils are defined. Read operations return 0. Write operations are accepted without error but have no effect.

5.4.6.5 Diagnostics (FC08)

Supported subfunctions:

Subfunction	Name
0	Return query data
1	Restart communication s option
2	Return diagnostic register
4	Force listen-only mode
10	Clear counters and dianostic register
11	Bus message count
12	Bus communication error count
13	Bus exception error count
14	Slave message count
15	Slave no response count
16	Slave NAK count
17	Slave busy count
18	Bus character overrun count

TABLE 5-31 ***Diagnostics (FC08)***

Chapter 6: Options and Accessories

6.1 General

This chapter provides information on the models, options, and accessories available for the 240 Series input module.

6.2 Models

The list of 240 Series input module model numbers is provided as follows:

Model	Description of models
240-2P	Cryogenic sensor input module with 2 inputs
240-8P	Cryogenic sensor input module with 8 inputs

TABLE 6-1 ***Model descriptions***

6.3 Accessories

Accessories are devices that perform a secondary duty as an aid or refinement to the primary unit. Refer to the Lake Shore Temperature Measurement and Control Catalog for details. A list of accessories available for the 240 Series input module is as follows:

Model	Description of accessories
G-106-055	Sensor input connector (5-pin terminal plug connector); two included
G-106-056	Power and communication connector (4-pin terminal block connector)
G-106-794	2 and 8 input module backplane connector, 5-pin
G-106-795	8 input module backplane pass through adapter, 5-pin
240-EVAL-KIT	Evaluation kit that contains: One (1) 240-2P and one (1) 240-8P, mounted to a DIN rail and delivered in a ruggedized hard case. Package also includes the following additional accessories to evaluate 240 Series functionality: Universal power supply, sensor simulator, fixed resistors, and the 240 Series accessory kit components.
240-ACC-KIT	Accessory kit. Contains items needed for configuration of one or more 240 modules. Includes: 240 Series user's manual, 240 Series quick start guide, USB cable, flash drive containing product data and software, 240 Series screwdriver, spare power, backplane and sensor connectors.
CAL-240-CERT†	Instrument recalibration with certificate
CAL-240-DATA†	Instrument recalibration with certificate and data

†RoHS compliant

TABLE 6-2 ***Accessories***

Chapter 7: Service

7.1 General

Lake Shore service personnel should be consulted if the instrument requires repair. See section 7.9.1 for contact information.

7.2 USB Troubleshooting

This section provides USB interface troubleshooting for issues that arise with new installations, existing installations, and intermittent lockups.

7.2.1 New Installation

1. Check that the USB driver is installed properly and that the device is functioning. In Microsoft Windows®, the device status can be checked using Device Manager by right-clicking Lake Shore Temperature Module under Ports (COM & LPT) or Other Devices and then clicking Properties. Refer to section 5.3.2 for details on installing the USB driver.
2. Check that the correct com port is being used. In Microsoft Windows®, the com port number can be checked using Device Manager under Ports (COM & LPT).
3. Check that the correct settings are being used for communication. Refer to section 5.3.2 for details on installing the USB driver.
4. Check cable connections and length.
5. Send the message terminator.
6. Send the entire message string at one time including the terminator. (Many terminal emulation programs do not.)
7. Send only one simple command at a time until communication is established.
8. Be sure to spell commands correctly and use proper syntax.

7.2.2 Existing Installation No Longer Working

1. Power the instrument off, then on again to see if it is a soft failure.
2. Power the computer off, then on again to see if communication port is locked up.
3. Check all the cable connections.
4. Check that the com port assignment has not been changed. In Microsoft Windows®, the com port number can be checked using Device Manager under Ports (COM & LPT).
5. Check that the USB driver is installed properly and that the device is functioning. In Microsoft Windows®, the device status can be checked using Device Manager by right-clicking Lake Shore Temperature Module under Ports (COM & LPT) or Other Devices and then clicking Properties.

7.3 Factory Reset

It is sometimes necessary to reset instrument parameter values or to clear the contents of curve memory. Both are stored in nonvolatile memory. Instrument calibration is not affected.

7.4 Error Messages

The following are error messages that may be displayed by the 240 Series input module during operation:

Message	Description
DISABLED	Input is disabled. Refer to section 4.2.
NO CURVE	Input has no curve. Refer to section 4.2.
S.OVER	Input is at or over full-scale sensor units.
S.UNDER	Input is at or under negative full-scale sensor units.
T.OVER	Input at or over the high end of the curve.
T.UNDER	Input at or under the low end of the curve.
****Invalid Cal** Press Escape & Enter**	The calibration memory is either corrupt, or is at the default, uncalibrated state. This message appears when the 240 Series input module is first powered on. To clear the message, and continue with instrument start-up, press Escape and Enter simultaneously.
**** Firmware Update** **In Progress ****	The 240 Series input module is in firmware update mode.

TABLE 7-1 ***Error messages***

7.5 Calibration Procedure

Instrument calibration can be obtained through Lake Shore Service. Refer to section 7.9 for technical inquiries and contact information.

7.6 Electrostatic Discharge

Electrostatic Discharge (ESD) may damage electronic parts, assemblies, and equipment. ESD is a transfer of electrostatic charge between bodies at different electrostatic potentials caused by direct contact or induced by an electrostatic field. The low-energy source that most commonly destroys Electrostatic Discharge sensitive devices is the human body, which generates and retains static electricity. Simply walking across a carpet in low humidity may generate up to 35,000 V of static electricity.

Current technology trends toward greater complexity, increased packaging density, and thinner dielectrics between active elements, which results in electronic devices with even more ESD sensitivity. Some electronic parts are more ESD-sensitive than others. ESD levels of only a few hundred volts may damage electronic components such as semiconductors, thick and thin film resistors, and piezoelectric crystals during testing, handling, repair, or assembly. Discharge voltages below 4000 V cannot be seen, felt, or heard.

7.6.1 Identification of Electrostatic Discharge Sensitive Components

The following are various industry symbols used to label components as ESD-sensitive.



7.7 Firmware Updates

This section provides instructions for updating the firmware in your instrument.

7.7.1 Updating the Firmware

Periodically Lake Shore provides updates to instrument firmware. The files for these updates can be downloaded from our website. Use MeasureLINK™ for the 240 Series to load the updated firmware into the instrument. See section 4.3.3.

7.8 Summary of Internal Memory Devices

This section outlines the internal memory devices used inside the 240 Series input module, and provides an explanation of the types of data they contain.

Manufacturer	Part number	Description	Location	Function	Volatility	Field modifiable
Microchip	ATSAM4E16	Microprocessor	U40	Main processor code	Non-volatile	Yes
STMicro	M95512	64 K EEPROM	U42	Instrument settings, calibration data	Non-volatile	Yes

TABLE 7-2 ***Summary of internal memory devices***

1. The Microchip ATSAM4E16 is a microprocessor with 1 MB of onboard programmable code memory and 128 kB of volatile RAM. The code is loaded using the USB interface.
2. The STMicro M95512 is used to store the instrument settings and the instrument calibration data. This data can only be modified by using the USB interface.

7.9 Technical Inquiries

Refer to the following sections when contacting Lake Shore for application assistance or product service. Questions regarding product applications, price, availability and shipments should be directed to sales. Questions regarding instrument calibration or repair should be directed to instrument service. Do not return a product to Lake Shore without a return material authorization (RMA) number (section 7.9.3).

7.9.1 Contacting Lake Shore

The Lake Shore Technical Support Department is staffed Monday through Friday between the hours of 8:00 AM and 5:00 PM EST, excluding holidays and company shut down days.

The Lake Shore Forum is also a great place to look for solutions, to post issues, and to share successes: https://forums.lakeshore.com/.

Contact Lake Shore Technical Support through any of the means listed below. However, the most direct and efficient means of contacting is to complete the online service request form at https://www.lakeshore.com/support/. Provide a detailed description of the problem and the required contact information. You will receive a response within 24 hours or the next business day in the event of weekends or holidays.

Mailing address	Lake Shore Cryotronics Support Department 575 McCorkle Blvd. Westerville, Ohio USA 43082-8888	
E-mail address	sales@lakeshore.com support@lakeshore.com	Sales Support
Telephone	614-891-2244 614-891-2243 select the option for Support	Sales Support
Fax	614-818-1600 614-818-1609	Sales Support
Web service request	https://www.lakeshore.com/support	Support

TABLE 7-3 ***Contact information***

7.9.2 Return of Equipment

The 240 Series input module is packaged to protect it during shipment.

NOTE

The user should retain any shipping carton(s) in which equipment is originally received, in the event that any equipment needs to be returned.

If original packaging is not available, a minimum of 76.2 mm (3 in) of shock absorbent packing material should be placed snugly on all sides of the instrument in a sturdy corrugated cardboard box. Please use reasonable care when removing the 240 Series input module from its protective packaging and inspect it carefully for damage. If it shows any sign of damage, please file a claim with the carrier immediately. Do not destroy the shipping container; it will be required by the carrier as evidence to support claims. Call Lake Shore for return and repair instructions.

All equipment returns must be approved by a member of the Lake Shore Service Department. The service engineer will use the information provided in the service request form and will issue an RMA. This number is necessary for all returned equipment. It must be clearly indicated on both the shipping carton(s) and any correspondence relating to the shipment. Once the RMA has been approved, you will receive appropriate documents and instructions for shipping the equipment to Lake Shore.

7.9.3 RMA Valid Period

RMAs are valid for 60 days from issuance; however, we suggest that equipment needing repair be shipped to Lake Shore within 30 days after the RMA has been issued. You will be contacted if we do not receive the equipment within 30 days after the RMA is issued. The RMA will be canceled if we do not receive the equipment after 60 days.

7.9.4 Shipping Charges

All shipments to Lake Shore are to be made prepaid by the customer. Equipment serviced under warranty will be returned prepaid by Lake Shore. Equipment serviced out-of-warranty will be returned FOB Lake Shore.

7.9.5 Restocking Fee

Lake Shore reserves the right to charge a restocking fee for items returned for exchange or reimbursement.